higher education & training

Department:
Higher Education and Training
REPUBLIC OF SOUTH AFRICA

MARKING GUIDELINE

NATIONAL CERTIFICATE

ENGINEERING DRAWING N1

21 November 2023

This marking guideline consists of 8 pages.

Copyright reserved

QUESTION 1

1.1
- 45° set square
- 30°/60° set square (2)

1.2
1.2.1 Central processing unit
1.2.2 Random-access memory
1.2.3 Hexagon

(3 × 1) (3)
[5]

QUESTION 2

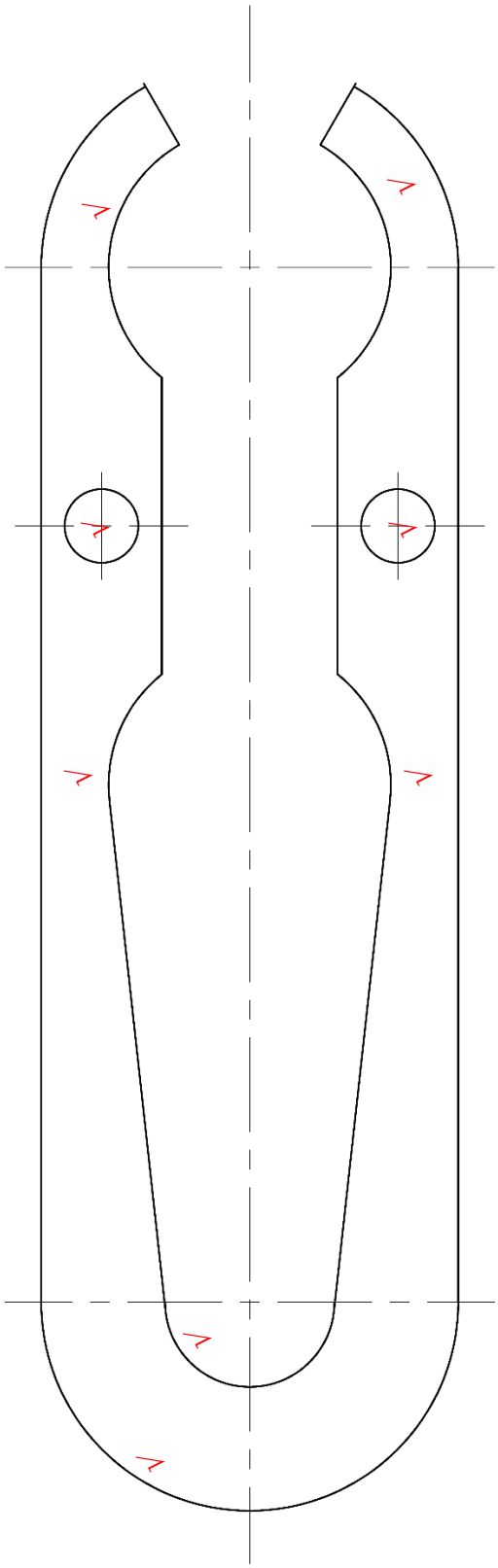

MARKING CRITERIA	
Correctness	6
Linework	2
Proportion	2
TOTAL	**10**

[10]

QUESTION 3

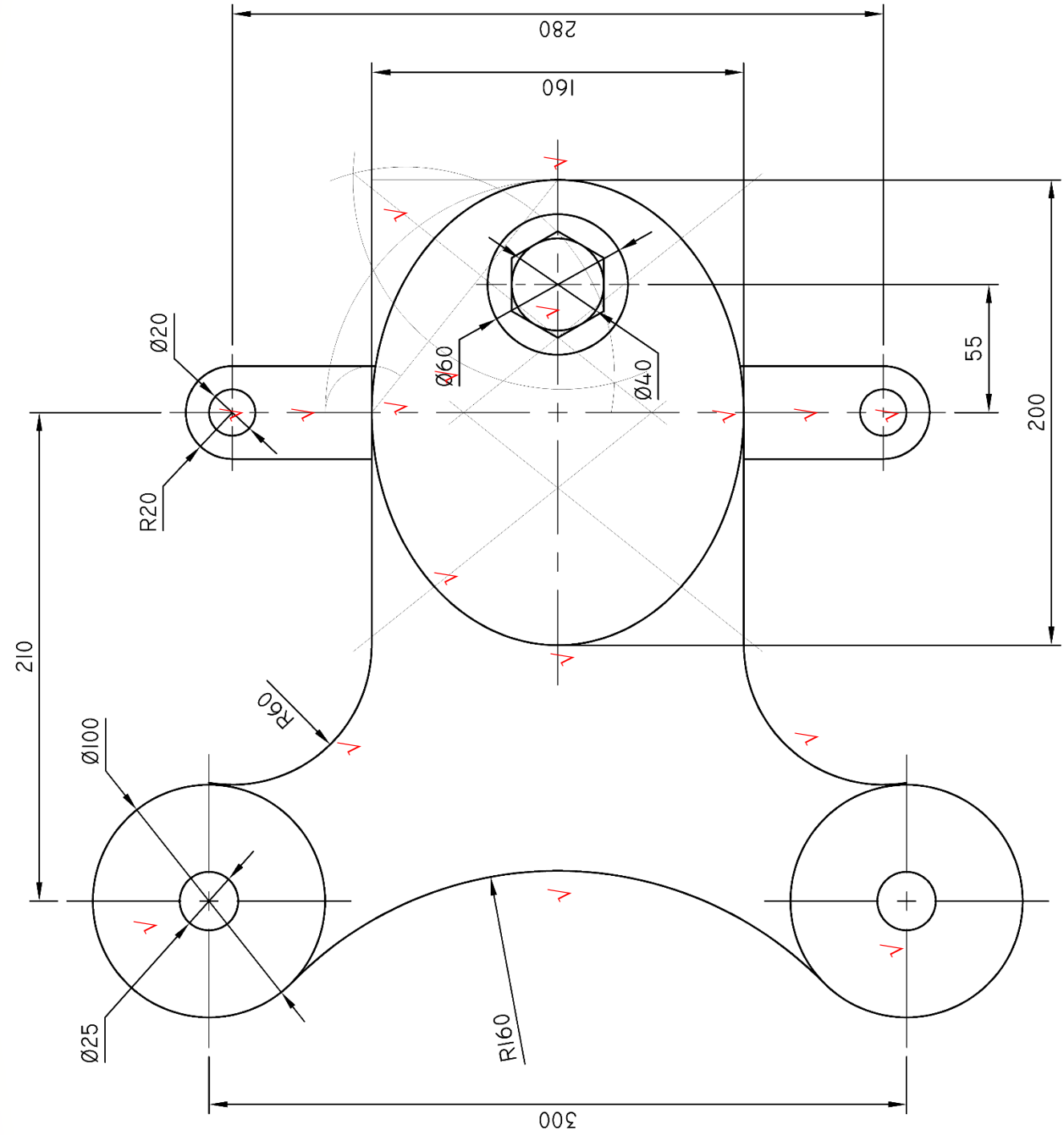

MARKING CRITERIA	
Correctness	8
Linework	3
Accuracy	2
Dimensions (Any 2 × 1)	1
TOTAL	**14**

[14]

QUESTION 4

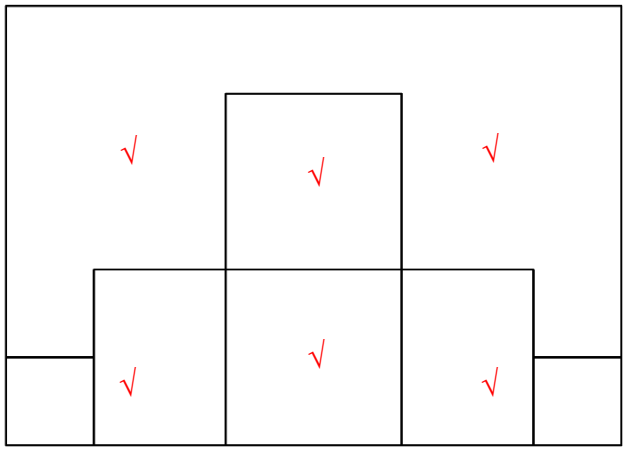

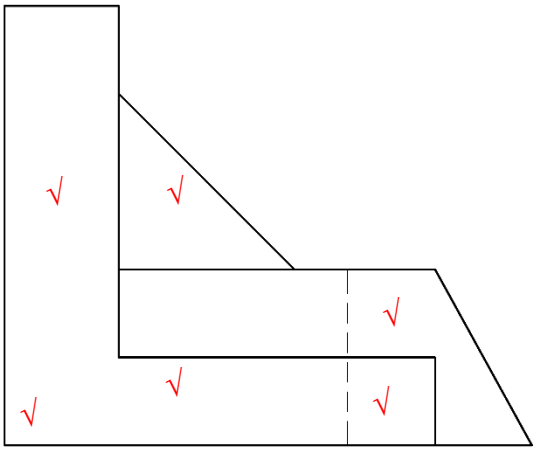

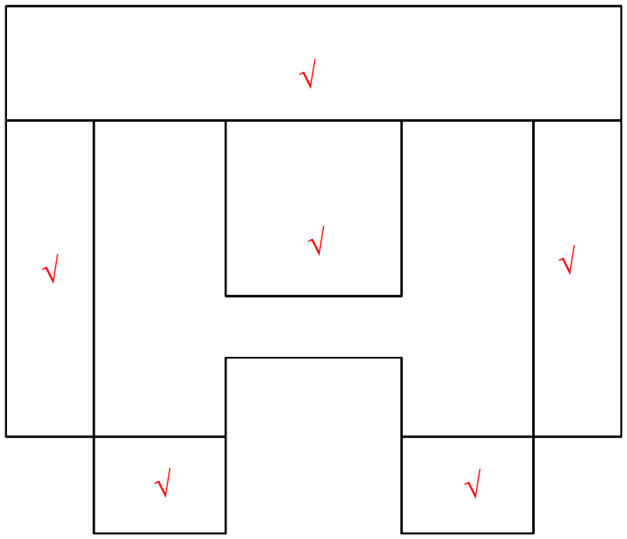

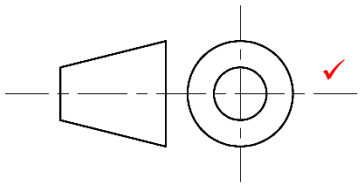

MACHINE PART

SCALE 1:1

MARKING CRITERIA			
	FV	LV	TV
Correctness	3	3	3
Linework	1	1	1
Accuracy	1	1	1
Title and scale	2		
Symbol	1		
TOTAL	**18**		

Copyright reserved

QUESTION 5

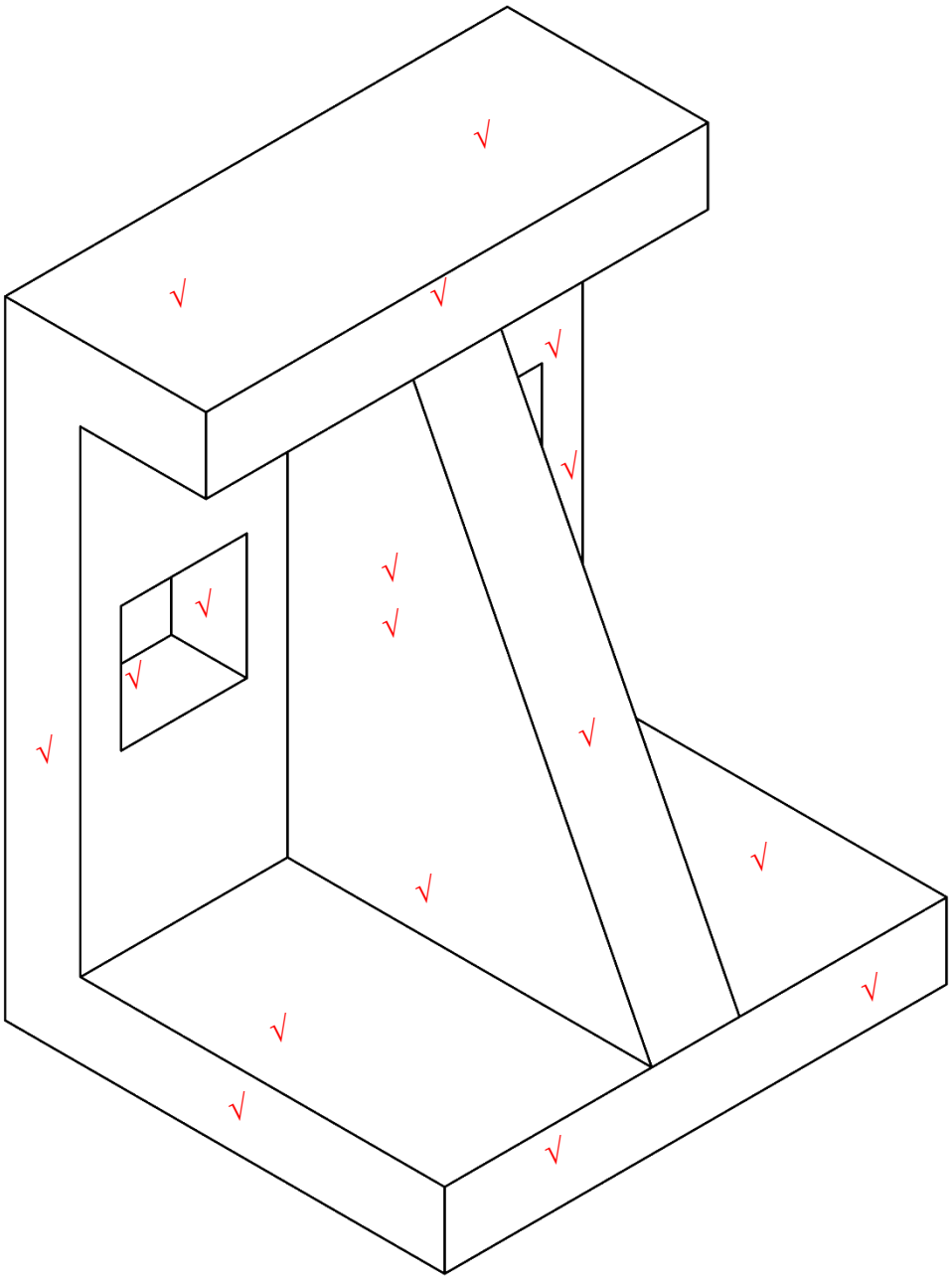

MARKING CRITERIA	
Correctness	13
Linework	2
Accuracy	1
Lowest point	1
TOTAL	**17**

Copyright reserved

QUESTION 6

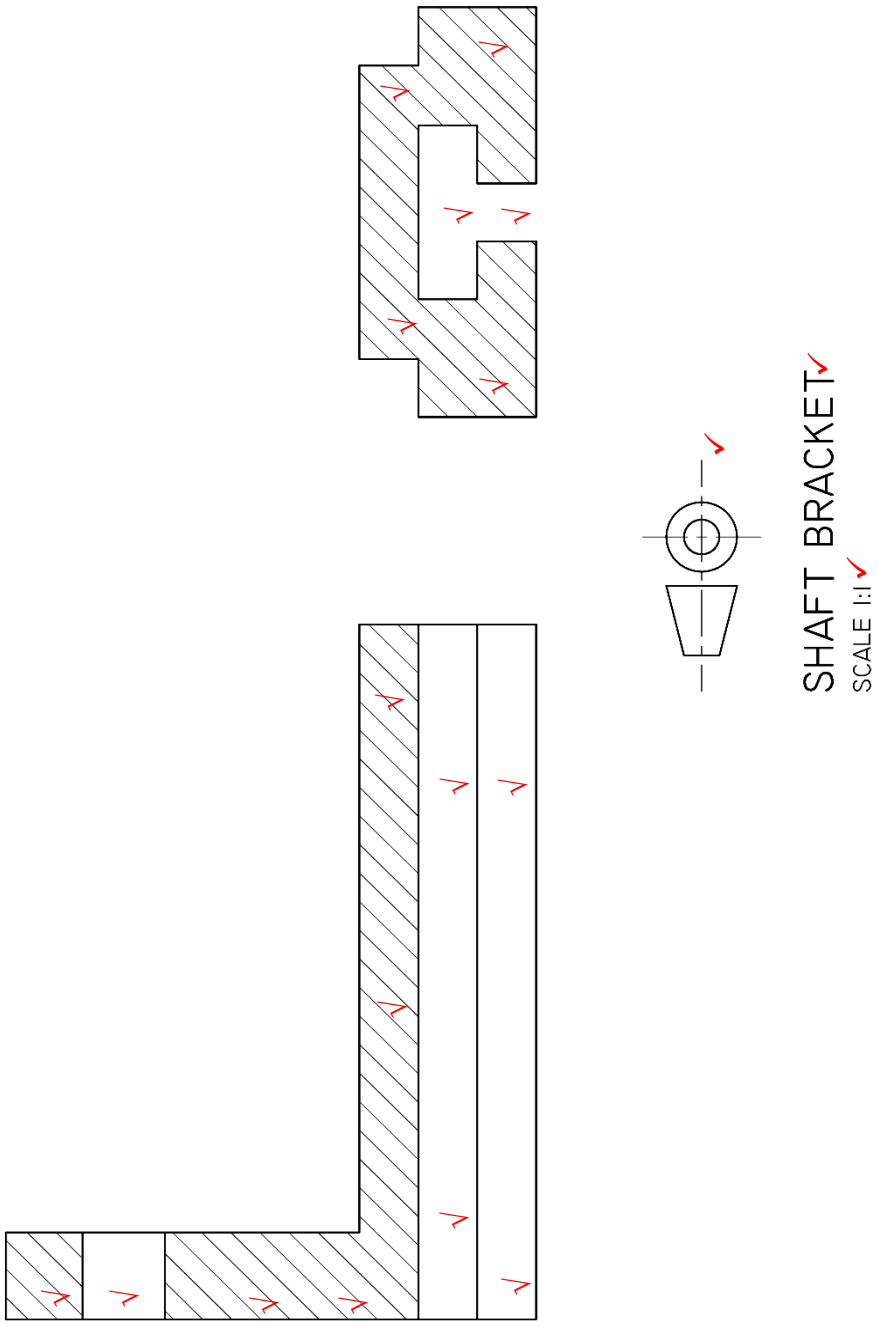

MARKING CRITERIA		
	FV	LV
Correctness	5	3
Linework	2	
Accuracy	2	
Title and scale	2	
Orthographic projection symbol	1	
Layout and neatness	3	
TOTAL	**18**	

Copyright reserved

QUESTION 7

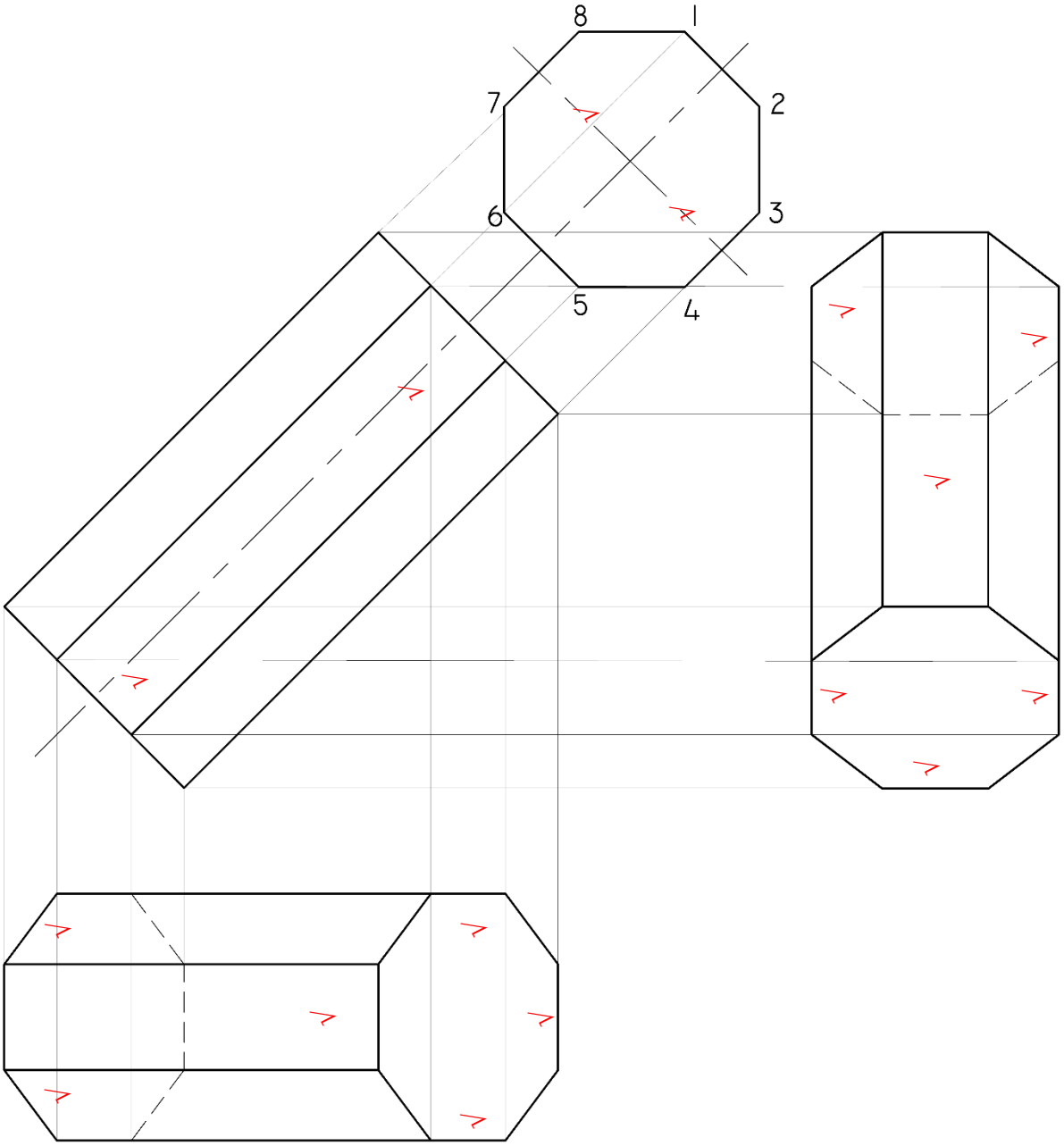

MARKING CRITERIA			
	FV	LV	TV
Correctness	2	3	3
Linework	2		
Accuracy	2		
Balance and layout	4		
TOTAL	**16**		

TOTAL: 100

Copyright reserved