higher education & training

Department:
Higher Education and Training
REPUBLIC OF SOUTH AFRICA

MARKING GUIDELINE

NATIONAL CERTIFICATE

BUILDING DRAWING N1

21 November 2022

This marking guideline consists of 10 pages.

Copyright reserved

QUESTION 1

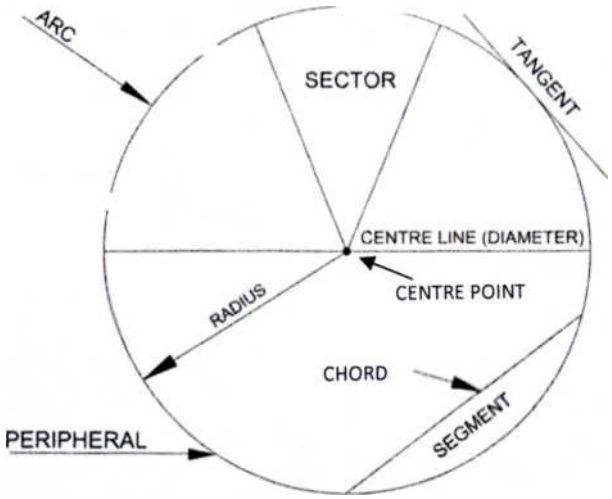

[10]

QUESTION 1: RUBRIC		
MARKING CRITERIA	**POSSIBLE MARK**	**REMARK**
Correctness	2	
Labelling	8	
TOTAL	**10**	

NOTE: No marks should be allocated for any part of the drawing in the incorrect position. However, marks to be allocated for hatching of that component where applicable.

QUESTION 2

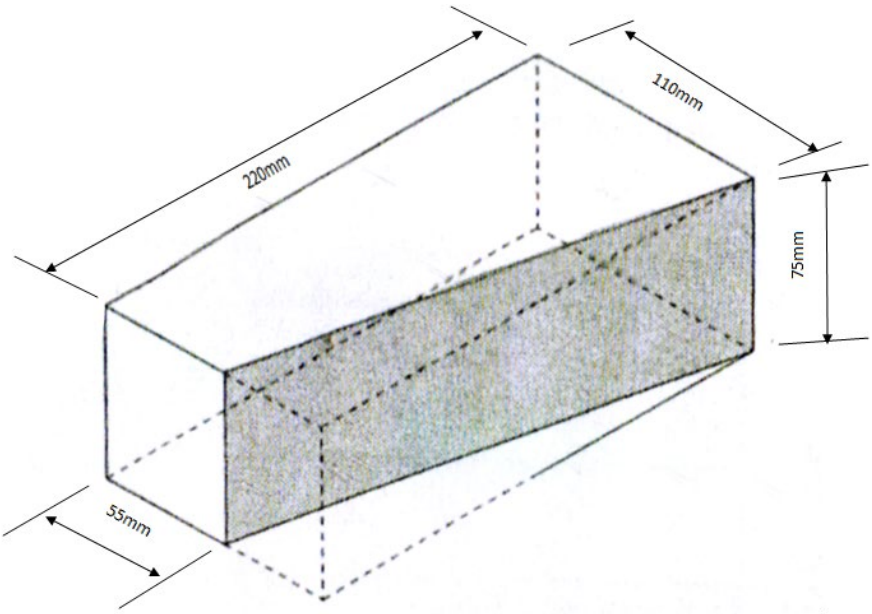

ISOMETRIC VIEW OF A BEVELLED CLOSER
SCALE 1:2 **[14]**

QUESTION 2: RUBRIC		
MARKING CRITERIA	**POSSIBLE MARK**	**REMARKS**
Axis	2	
Correctness	3	
Correct size	3	
Dimensions	4	
Layout and neatness	2	
TOTAL	**14**	

NOTE: No marks should be allocated for any part of the drawing in the incorrect position. However, marks to be allocated for hatching of that component where applicable.

Copyright reserved

QUESTION 3

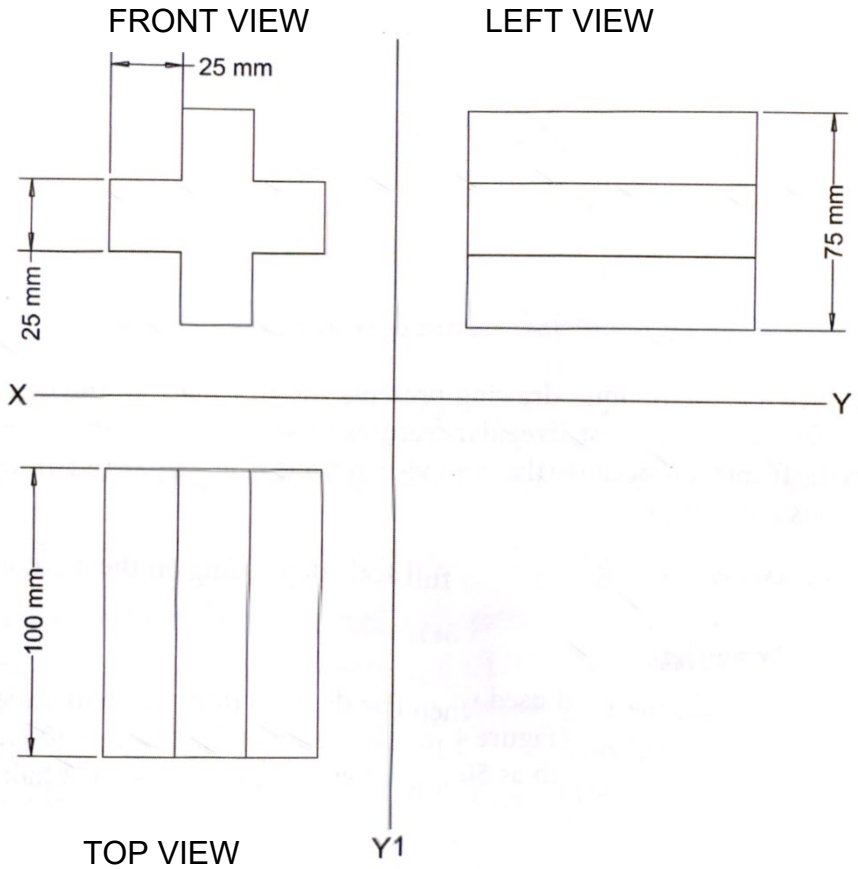

[14]

QUESTION 3: RUBRIC		
MARKING CRITERIA	**POSSIBLE MARK**	**REMARKS**
Front view	4	
Top view	4	
Left view	4	
Layout and neatness	2	
TOTAL	**14**	

NOTE: No marks should be allocated for any part of the drawing in the incorrect position. However, marks to be allocated for hatching of that component where applicable.

QUESTION 4

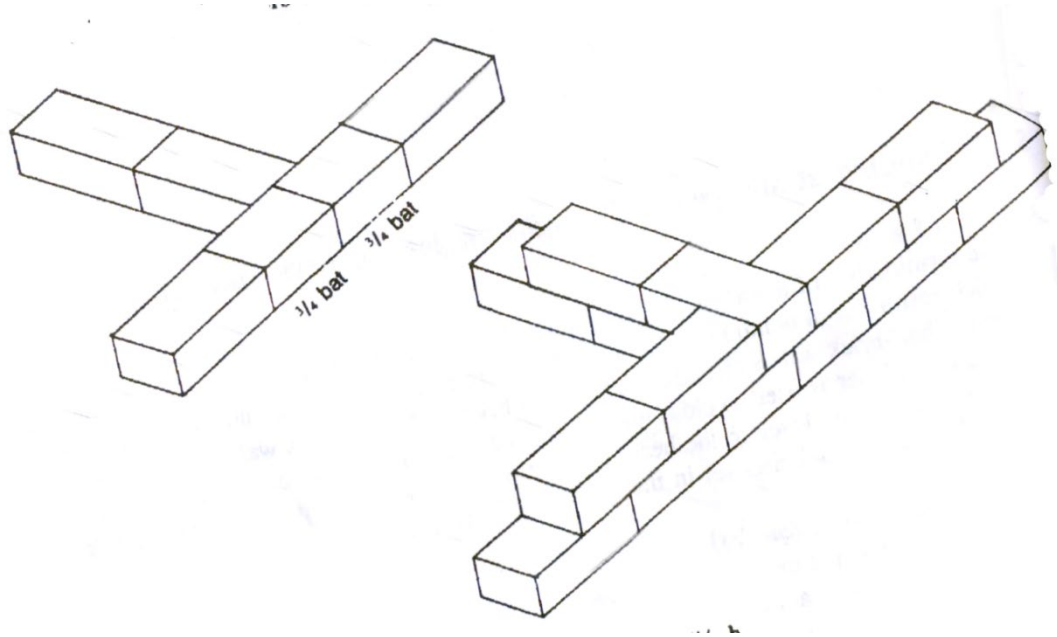

ALTERNATE PLAN COURSES OF A T-JUNCTION BETWEEN TWO HALF-BRICK WALLS
SCALE 1:10 **[12]**

QUESTION 4: RUBRIC		
MARKING CRITERIA	**POSSIBLE MARK**	**REMARKS**
Correctness	5	
Correct pattern	2	
Correct size	2	
Label (3/4 bat)	1	
Layout and neatness	2	
TOTAL	**12**	

NOTE: No marks should be allocated for any part of the drawing in the incorrect position. However, marks to be allocated for hatching of that component where applicable.

Copyright reserved

QUESTION 5

5.1

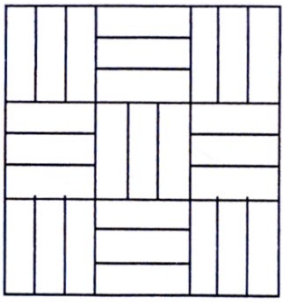

BASKET PATTERN

5.2

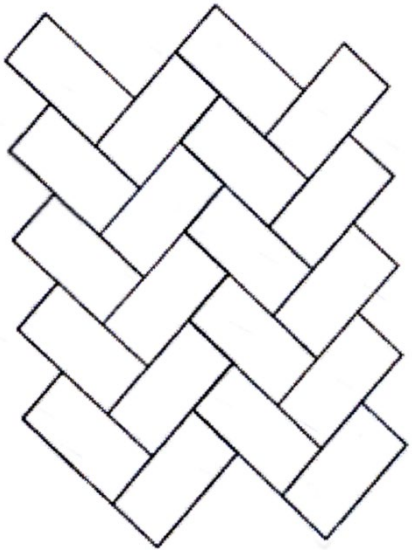

HERRING BONE PATTEN

5.3

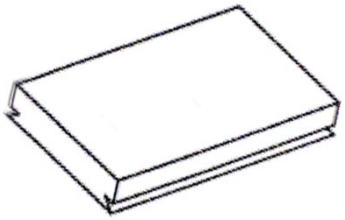

HARDWOOD FLOOR BLOCK

(3 × 4) **[12]**

QUESTION 5: RUBRIC			
	MARKING CRITERIA	**POSSIBLE MARK**	**REMARKS**
Basket pattern	Correct pattern	3	
	Neatness	1	
Herring bone	Correct pattern	3	
	Neatness	1	
Hardwood floor block	Correct pattern	3	
	Neatness	1	
TOTAL		**12**	

NOTE: No marks should be allocated for any part of the drawing in the incorrect position. However, marks to be allocated for hatching of that component where applicable.

QUESTION 6

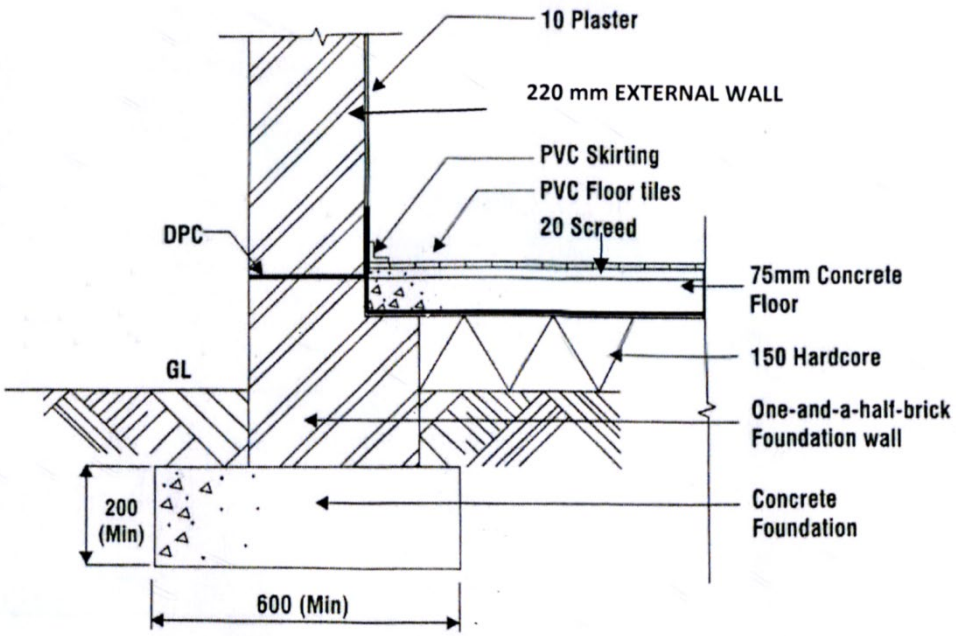

VERTICAL CROSS SECTION THROUGH A STRIP FOUNDATION OF A ONE-AND-A-HALF-BRICK FOUNDATION WALL OF A DWELLING
SCALE 1:10 **[20]**

QUESTION 6: RUBRIC			
PART OF THE DRAWING	**MARKING CRITERIA**	**POSSIBLE MARKS**	**REMARKS**
Wall, foundation wall, plaster	Correct position	3	
	Correct size	3	
	Hatching	3	
	Labelling	3	
Strip foundation, hard core, concrete floor	Correct position	3	
	Correct size	3	
	Hatching	3	
	Labelling	3	
Screed, PVC tiles and skirting	Correct position	3	
	Correct size	3	
	Hatching	3	
	Labelling	3	
Ground level	Correct position	1	
	Hatching	1	
	Labelling	1	
DPC	Correct position	1	
	Labelling	1	
	Subtotal	**41**	
	Divide by	**3,2**	
	Overall correctness	**13**	
	Line work	**3**	
	Accuracy	**2**	
	Balanced layout and neatness	**2**	
	TOTAL	**20**	

NOTE: No marks should be allocated for any part of the drawing in the incorrect position. However, marks to be allocated for hatching of that component where applicable.

Copyright reserved

QUESTION 7

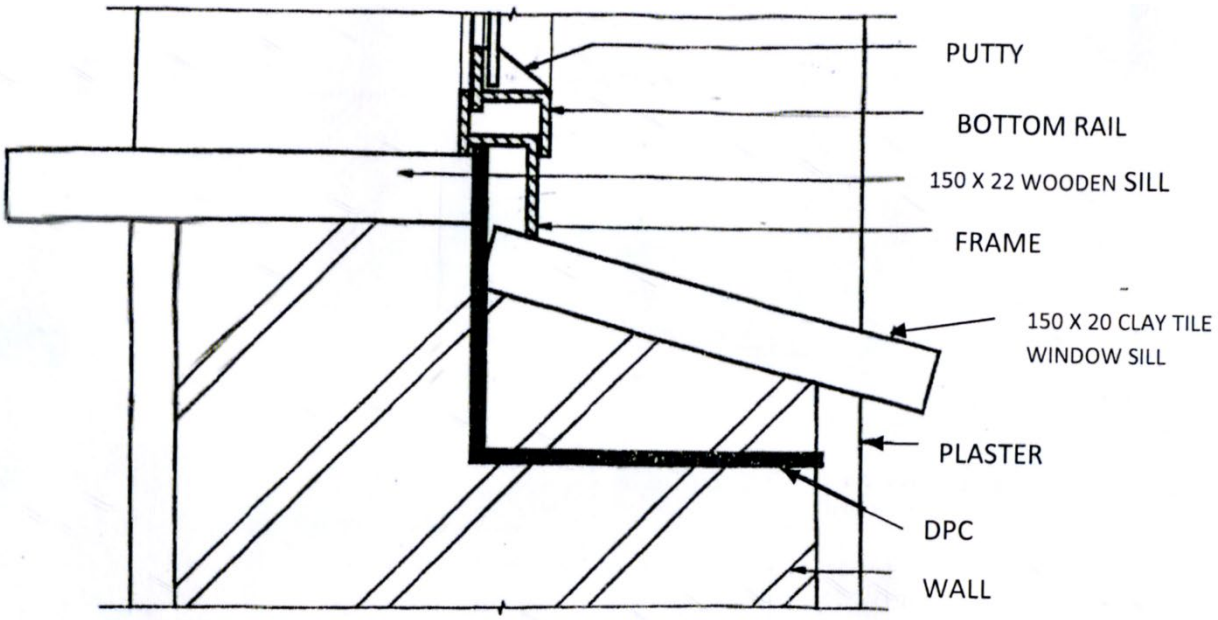

SECTION THROUGH A SILL OF A STEEL-CASEMENT WINDOW
SCALE 1:2 **[18]**

QUESTION 7: RUBRIC			
PART OF THE DRAWING	**MARKING CRITERIA**	**POSSIBLE MARKS**	**REMARKS**
Wall, plaster and DPC	Correct position	3	
	Correct size	3	
	Hatching	3	
	Labelling	3	
Frame, putty, bottom rail, internal wooden sill and clay window sill	Correct position	5	
	Correct size	5	
	Hatching	2	
	Labelling	5	
	Subtotal	**29**	
	Divide by	**2,4**	
	Overall correctness	**12**	
	Line work	**2**	
	Accuracy	**2**	
	Balanced layout and neatness	**2**	
	TOTAL	**18**	

NOTE: No marks should be allocated for any part of the drawing in the incorrect position. However, marks to be allocated for hatching of that component where applicable.

TOTAL: 100

Copyright reserved