higher education & training

Department:
Higher Education and Training
REPUBLIC OF SOUTH AFRICA

NATIONAL CERTIFICATE

BUILDING DRAWING N1

(8090001)

27 November 2023 (X-paper)
09:00–13:00

REQUIREMENTS: ONE A2 drawing sheet

Drawing instruments may be used.

This question paper consists of 6 pages.

096Q1E2327

Copyright reserved

DEPARTMENT OF HIGHER EDUCATION AND TRAINING
REPUBLIC OF SOUTH AFRICA

NATIONAL CERTIFICATE
BUILDING DRAWING N1
TIME: 4 HOURS
MARKS: 100

INSTRUCTIONS AND INFORMATION

1. Answer all the questions.
2. Read all the questions carefully.
3. Number the answers according to the numbering system used in this question paper.
4. All drawings must be drawn to the required scale.
5. Use both sides of the DRAWING SHEET.
6. All drawings must be done in pencil.
7. All drawing work must comply with the relevant SANS (SABS) recommended codes.
8. Use your own discretion where dimensions are not given.
9. All abbreviations and symbols must comply with the latest National Building Regulations and all relevant SANS (SABS) codes.
10. A balanced layout is very important, and candidates will be penalised for poor planning.
11. Sketches and diagrams must be neat, reasonably large, in proportion and fully labelled.
12. All labelling must be in capital letters.
13. Provide an appropriate title and scale for all drawings.
14. Use only a black or blue pen.
15. Write neatly and legibly.

Copyright reserved

QUESTION 1

Various options are given as possible answers to the following questions. Choose the answer and write only the letter (A–C) next to the question number (1.1–1.10) in the ANSWER BOOK.

1.1 Can be regarded as a corner or the space between two straight lines (stated in degrees) that meet at a point called the vertex:

A Angle
B Bisection
C Line segment

1.2 To divide an angle or line into two equal parts:

A Angle
B Bisect
C Line segment

1.3 The shortest distance between two points:

A Rise
B Span
C Line segment

1.4 The same distance apart throughout their length:

A Line segment
B Parallel lines
C Straight lines

1.5 Deals with two-dimensional objects that have length and breadth but no thickness:

A Straight lines
B Plane geometry
C Parallel lines

1.6 At right angles to a given line or surface:

A Parallel lines
B Perpendicular
C Straight line

1.7 A straight line starting at a fixed point stretching out limitlessly in one direction:

A Perpendicular line
B Radius
C Straight line

Copyright reserved

1.8 Deals with three-dimensional objects that have length, breadth and thickness:

A Solid geometry
B Bisection
C Plane geometry

1.9 Stretches out in both directions and has no definite length:

A Straight line
B Bisecting line
C Radius

1.10 Comes into existence through the movement of the geometrical point:

A Angle
B Geometrical line
C Bisecting line

(10 × 1) **[10]**

QUESTION 2: GEOMETRICAL DRAWING

Draw, to full size, a circle with a diameter of 100 mm and indicate the following on the drawing:

- Arc
- Sector
- Radius
- Centre
- Diameter
- Chord
- Segment
- Tangent

[10]

QUESTION 3: PROJECTION

The diagram below shows a pictorial view of a wooden block. Do not copy the given view, but draw, to full size and in first-angle orthographic projection, the following THREE views of the block:

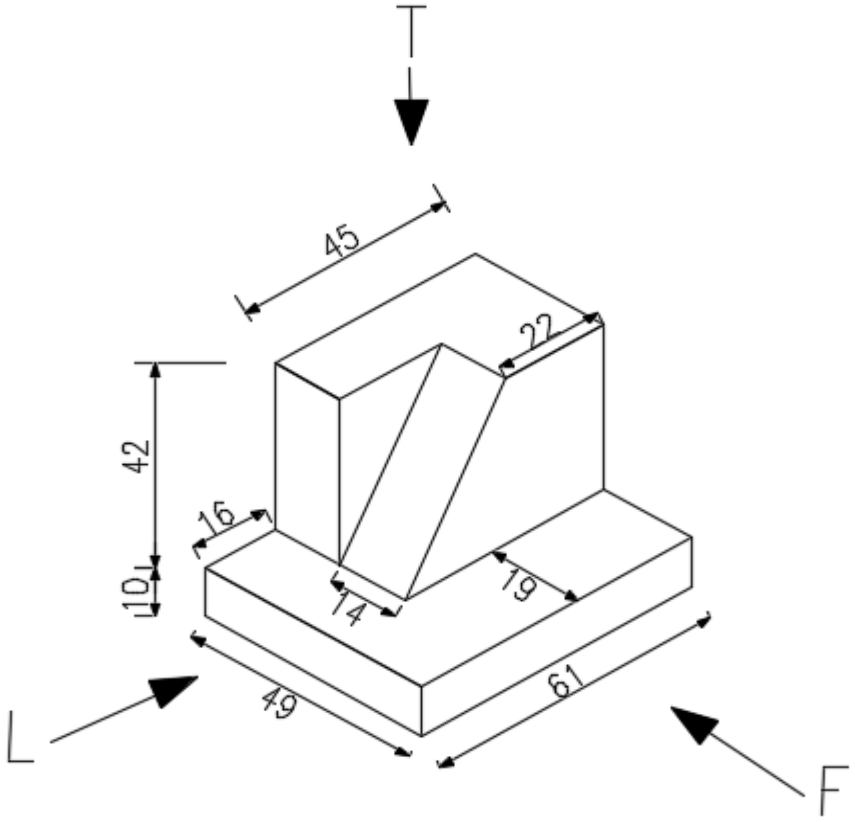

- A front view as seen in the direction of arrow F
- A left view as seen in the direction of arrow L
- A top view as seen in the direction of arrow T

Use scale 1:1.

Dimension the THREE views and print the title and scale centrally beneath the layout.

[20]

QUESTION 4: FOUNDATIONS, BRICKWORK AND FLOORS

As an architectural draughtsperson, you are required to draw to a scale of 1:10 a vertical section through a foundation wall and footing showing an internal half-brick wall.

The drawing must show the following specifications:

- Concrete foundation: Projecting 110 mm on both sides of the footing
- Footing: One course high
- Foundation wall: Half-brick wall
- Internal wall: Half-brick wall
- Depth construction line: To be shown
- Ground level: Top of the ground level is four courses above the concrete foundation
- Hard core: 150 mm
- Floor slab: 100 mm
- DPM: 375 microns
- Plaster: 19 mm on both sides
- Concrete tiles: 220 mm × 220 mm × 20 mm **[20]**

QUESTION 5: DOORS

An external raised and fielded panel door is 2 033 mm high, 820 mm wide and 44 mm thick with a high lock rail. The upper and bottom part of the door are divided into equal vertical panels by a muntin. The panel consists of single raised and fielded panels:

Draw, to scale 1:10, the outside view of the external door using the following specifications:

- Top rail: 100 mm × 44 mm
- High lock rail: 240 mm × 44 mm (1 250 mm high)
- Bottom rail: 260 mm × 44 mm
- Stiles: 100 mm × 44 mm
- Muntin: 100 mm × 44 mm
- Raised and fielded panels: 30 mm thick **[20]**

QUESTION 6: ROOF STRUCTURES

Make neat line diagrams of the following ridge details:

- Cross-sectional view of ridge details for a metal roof sheeting
- Valley details for a metal sheet roof
- Cross-sectional view of ridge details for a tiled roof
- Valley details for a tiled roof

(4 × 5) **[20]**

TOTAL: 100

Copyright reserved