higher education & training

Department:
Higher Education and Training
REPUBLIC OF SOUTH AFRICA

MARKING GUIDELINE

NATIONAL CERTIFICATE

BUILDING DRAWING N1

27 November 2023

This marking guideline consists of 10 pages.

Copyright reserved

QUESTION 1

1.1 A
1.2 B
1.3 C
1.4 B
1.5 B
1.6 B
1.7 B
1.8 B
1.9 A
1.10 B

(10 × 1) **[10]**

Copyright reserved

QUESTION 2

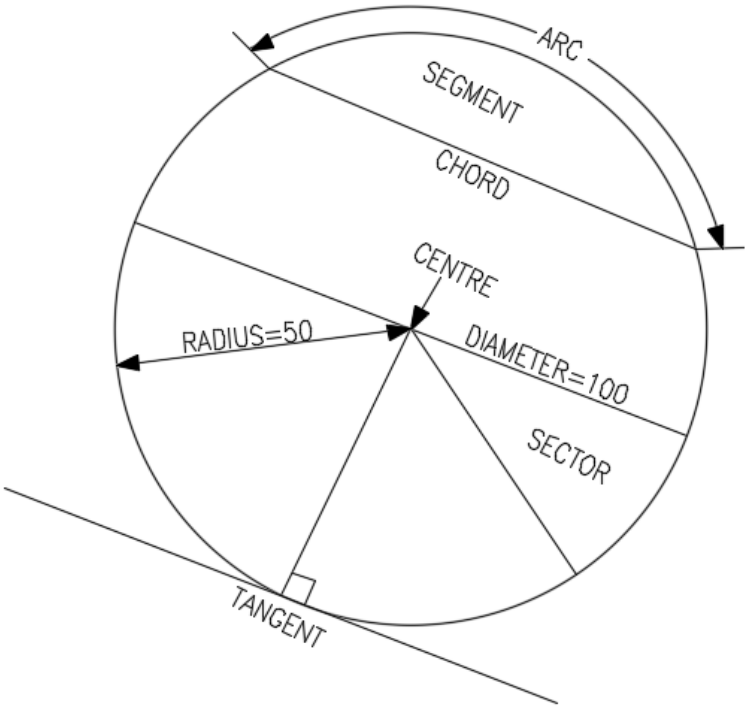

MARKING CRITERIA	POSSIBLE MARK
Accuracy	1
Correctness and neatness	1
Labelling	8
TOTAL:	**10**

NOTE: No marks should be allocated for any part of the drawing that is in an incorrect position, but marks should be allocated for hatching of that component.

Marks should be allocated for neatness, correct title and scale if the drawing is completely incorrect.

Copyright reserved

QUESTION 3

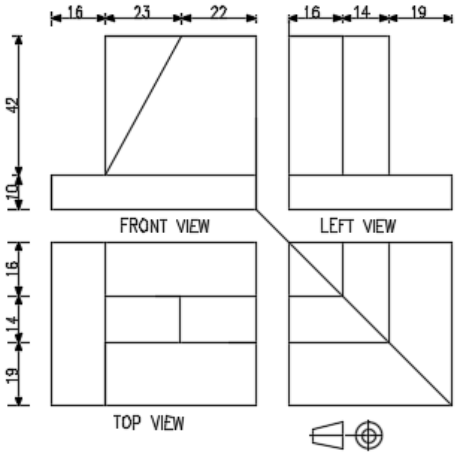

PROJECTION
SCALE 1:1

MARKING CRITERIA	POSSIBLE MARK	REMARKS
Front view	5	
Top view	5	
Left view	5	
Layout and neatness	5	
TOTAL:	**20**	

NOTE: No marks should be allocated for any part of the drawing that is in an incorrect position, but marks should be allocated for hatching of that component.

Marks should be allocated for neatness, correct title and scale if the drawing is completely incorrect.

Copyright reserved

QUESTION 4

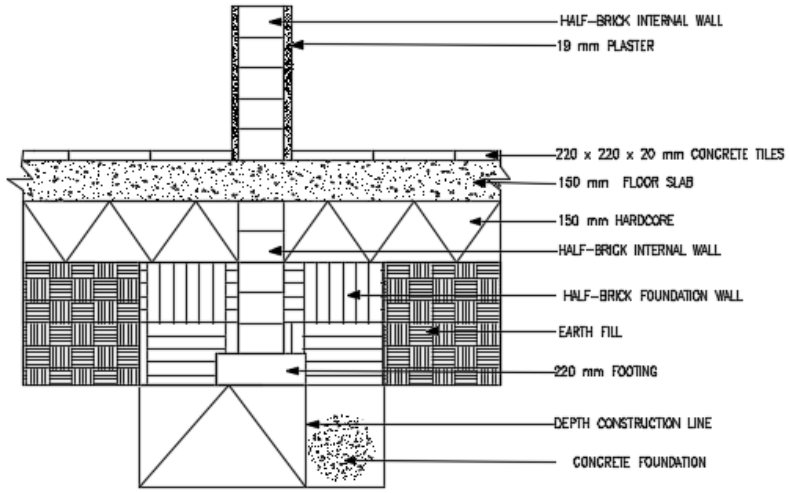

VERTICAL SECTION THROUGH FOUNDATION WALL AND FOOTING
SCALE 1:10

RUBRIC			
PART OF THE DRAWING	**MARKING CRITERIA**	**POSSIBLE MARK**	**REMARKS**
Concrete foundation, foundation wall and footing	Correct position	3	
	Size correct	3	
	Labelling	3	
	Neatness	3	
	Hatching	3	
Internal wall and plaster	Correct position	3 (plaster × 2)	
	Size correct	3 (plaster × 2)	
	Labelling	3 (plaster × 2)	
	Neatness	2	
	Hatching	3 (plaster × 2)	
Hard core, floor and concrete	Correct position	3	
	Size correct	3	
	Labelling	3	
	Neatness	3	
	Hatching	3	
Ground level, DPM and depth construction line	Correctness	2	
	Size correct	3 (GL × 2)	
	Hatching	4 (earth fill × 2)	
	Labelling	4	
	Neatness	4 (GL × 2)	
	Subtotal	**60**	
	Divide layout by 3,61	13	
	Balanced layout and accuracy	5	
	Title	1	
	Scale	1	
TOTAL:		**20**	

NOTE: No marks should be allocated for any part of the drawing that is in an incorrect position, but marks should be allocated for hatching of that component.

Marks should be allocated for neatness, correct title and scale if the drawing is completely incorrect.

Copyright reserved

QUESTION 5

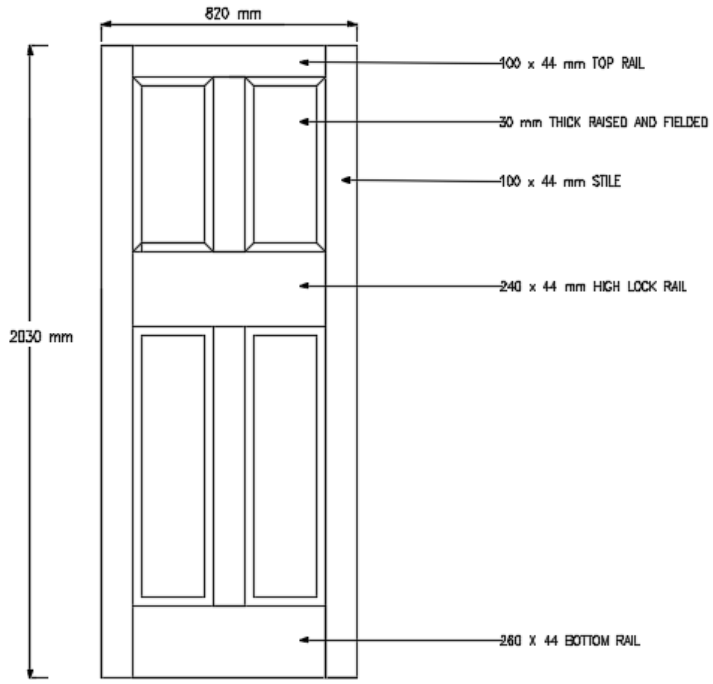

Copyright reserved

RUBRIC			
PART OF THE DRAWING	**MARKING CRITERIA**	**POSSIBLE MARK**	**REMARKS**
Top rail and bottom rail	Correct position	2	
	Size correct	2	
	Labelling	2	
	Neatness	2	
Stiles and high lock rail	Correct position	2	
	Size correct	2	
	Labelling	2	
	Neatness	2	
Raised and field panel	Correct position	2	
	Size correct	2	
	Labelling	1	
	Neatness	2	
Dimensions	Correctness	2	
	Total	17	
	Divide layout by 1,13	13	
	Balanced layout and accuracy	5	
	Title	1	
	Scale	1	
TOTAL:		**20**	

Copyright reserved

QUESTION 6

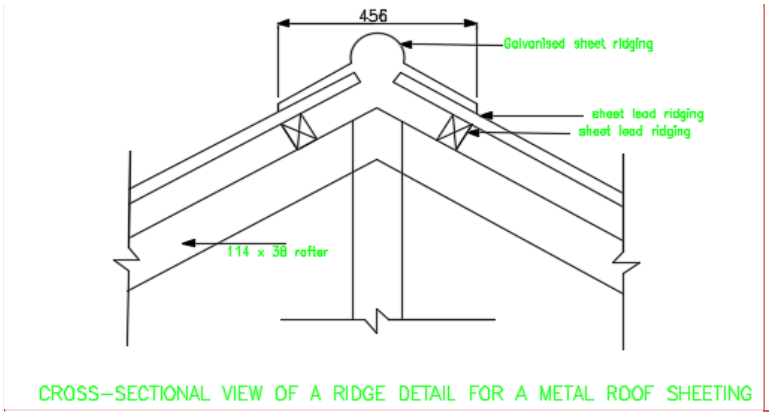

CROSS–SECTIONAL VIEW OF A RIDGE DETAIL FOR A METAL ROOF SHEETING

Commented [L1]: Start all labels with initial capital letter. Make all labels black.

Change:
CROSS-SECTIONAL VIEW OF RIDGE DETAILS …

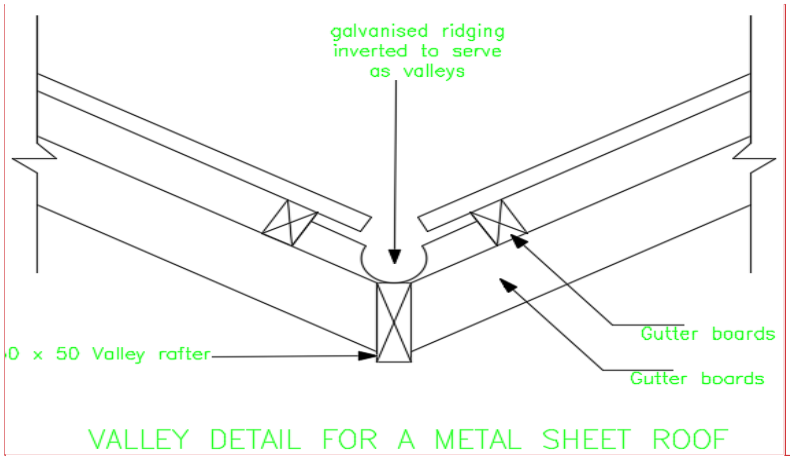

VALLEY DETAIL FOR A METAL SHEET ROOF

Commented [L2]: Make sure that label on the left fits in.
Change:
… x 50 valley rafter (lowercase v)
Valley details …

Copyright reserved

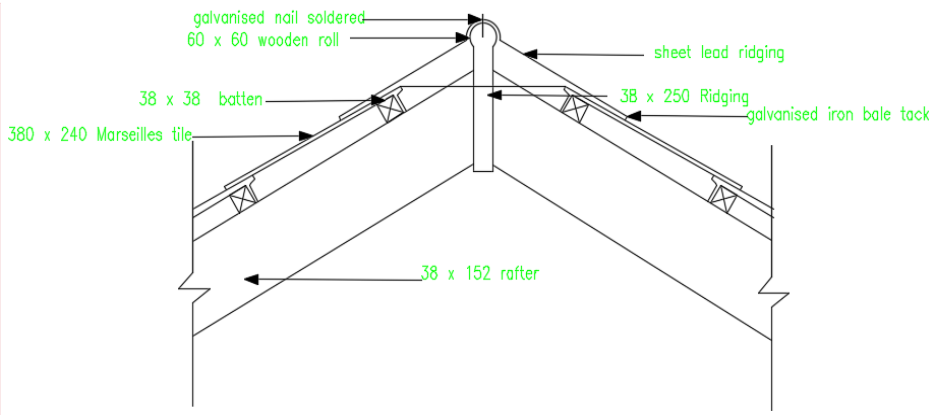

CROSS SECTIONAL VIEW OF A RIDGE DETAILS FOR A TILED ROOF

Commented [L3]: Change:
38 x 250 ridging
CROSS-SECTIONAL VIEW OF RIDGE DETAILS …

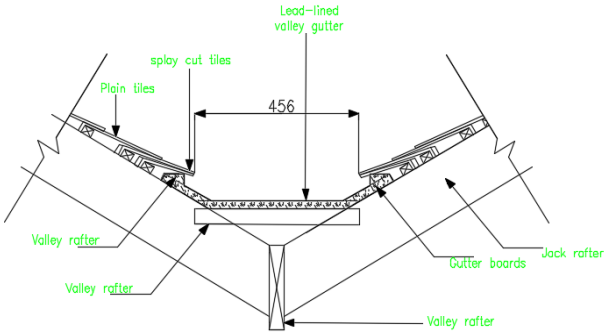

VALLEY DETAILS FOR A TILED ROOF

Cross-sectional view of ridge details for metal roof sheeting	5	
Valley details for a metal sheet roof	5	
Cross-sectional view of ridge details for a tiled roof	5	
Valley details for a tiled roof	5	
TOTAL:	**20**	

NOTE : No marks should be allocated for any part of the drawing that is in an incorrect position, but marks should be allocated for hatching of that component.

Marks should be allocated for neatness, correct title and scale if the drawing is completely incorrect.

TOTAL: 100

Copyright reserved