higher education & training

Department:
Higher Education and Training
REPUBLIC OF SOUTH AFRICA

MARKING GUIDELINE

NATIONAL CERTIFICATE

BRICKLAYING AND PLASTERING THEORY N1

22 November 2022

This marking guideline consists of 7 pages.

Copyright reserved

QUESTION 1

1.1
1.1.1 B
1.1.2 C
1.1.3 A
1.1.4 C
1.1.5 B

(5 × 1) (5)

1.2
- Steel tools should be dried and wiped with an oily rag before being stored. This will prevent rusting.
- A strong wooden or metal box helps to protect the tools when not in use.
- Tools should always be kept clean and in good condition. (3)

1.3
- Choose the longest possible level suitable for the task.
- Level should be strongly made to withstand rough handling.
- The bubble should respond quickly when the level is disturbed.
- The vial should be visible on both sides.
- The bubble should be adjustable to allow for minor adjustment when the level does not give an accurate reading. (5)

1.4
- Serrated-edge trowel
- Rubber float
- Tile cutter
- Tile nipper
- Chalk line
- Tile gauge
- Rod saw
- Tile hammer
- Spring dividers (Any 5 × 1) (5)

1.5

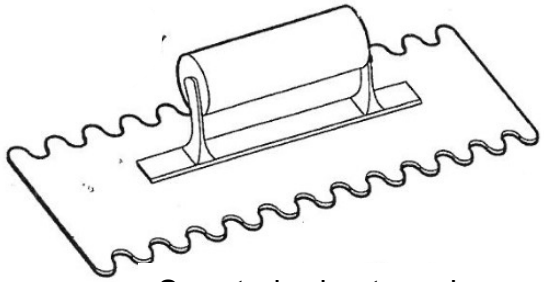

Serrated-edge trowel

(2)
[20]

QUESTION 2

Alternate plan courses of one-brick cross junction in English bond

Scale 1 : 10

Bond	6
Scale	2
Title	2
TOTAL	**10**

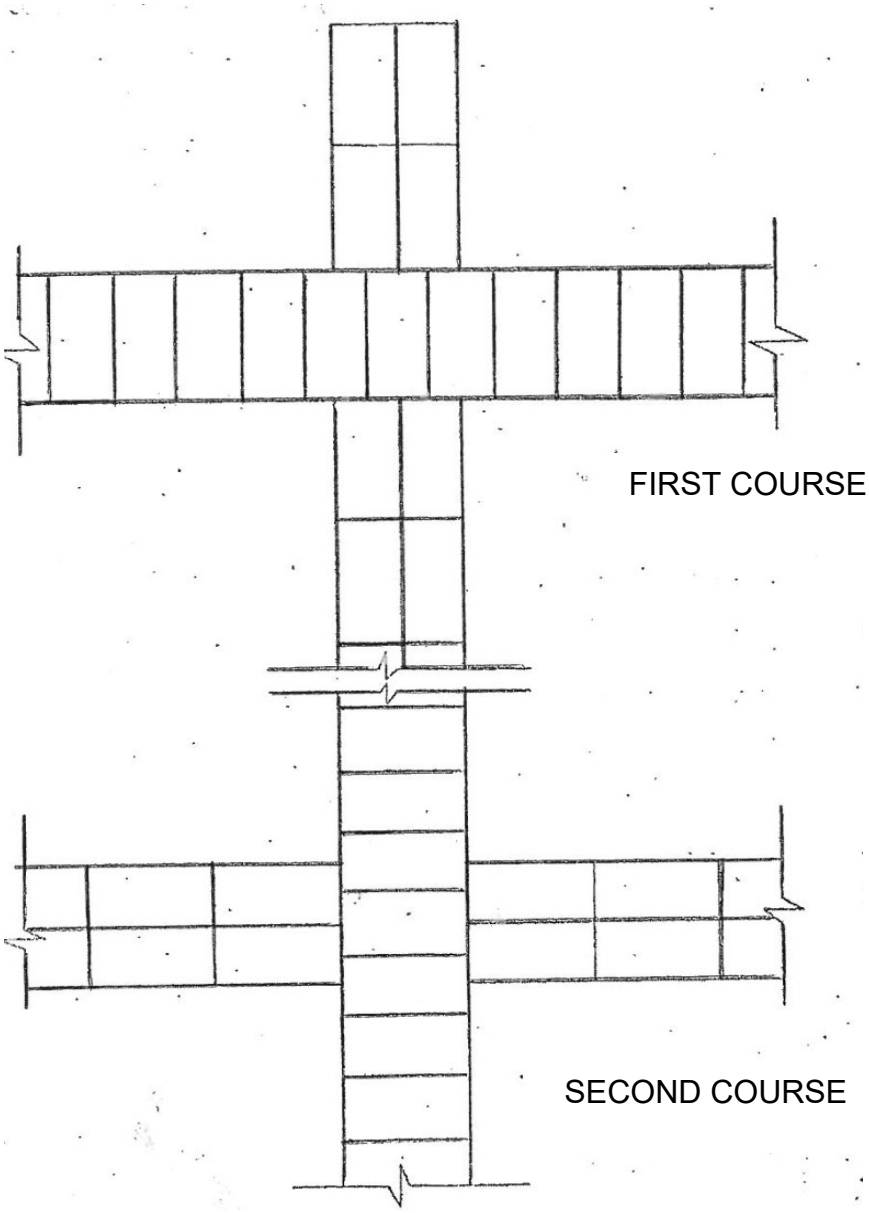

Scale 1 : 10

Bond	6
Scale	2
Title	2
TOTAL	**10**

[20]

QUESTION 3

3.1
- Bulk density
- Porosity
- Strength at room temperature (3)

3.2
- Durability
- Hardness and compactness
- Porosity and absorption (3)

3.3
- Ordinary Portland cement
- Rapid hardening Portland cement
- High alumina cement
- Sulphate-resistant cement
- White cement and coloured cement (5)

3.4
- Lime is mined using the opencast method which is followed by a very complicated refining and screening process.
- To obtain one tonne of lime, 2,1 tonnes of limestone must pass through the kilns.
- After the limestone has been refined and screened it is fed into rotation kilns. The downwards sloping and rotating movement of kilns cause the limestone to move forward while it absorbs the heat.
- It takes about 2 hours for the limestone to pass through the kiln. The temperature in the kilns is raised to 1 300 °C.
- This heat expels the carbon dioxide from the calcium carbonate, leaving unslaked lime. (5)

3.5
- Vibration or jolting of the concrete during transportation
- Lateral flow of the concrete
- Overworking of the mix
- Bad mix proportioning (4)

[20]

Copyright reserved

QUESTION 4

4.1
- By decomposition
- By disintegration (2)

4.2
- Prepare a mixing platform made of a steel sheet or a concrete slab.
- Spread the sand in a circular layer of 75 mm to 100 mm thick on the mixing platform.
- Spread cement evenly over sand and mix the two to a uniform colour.
- Spread the mixture over the area and add water gradually while mixing until a consistency of thin porridge is achieved.
- Shovel the materials into a flat heap with a saucer-shaped depression in the centre.
- Half the amount of water required is poured into this depression.
- The mixing is carried out by shovelling material from the edges of the heap into the centre.
- In the centre each shovelful is turned over as it is dumped.
- Spread out the mixture, distribute the stone over this and mix thoroughly.
- Mixing should be continued until the colour and consistency of the concrete are uniform throughout. (10)

4.3 4.3.1

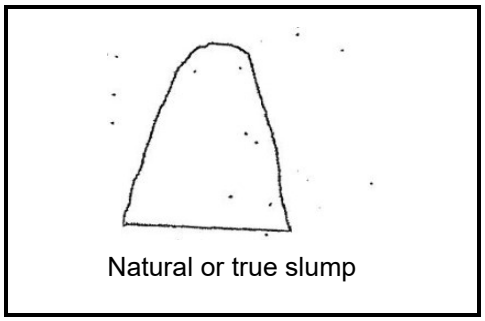

4.3.2

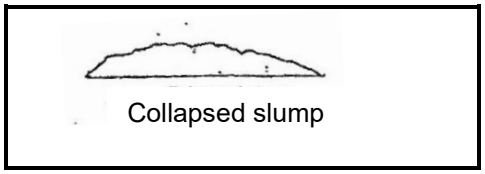

4.3.3

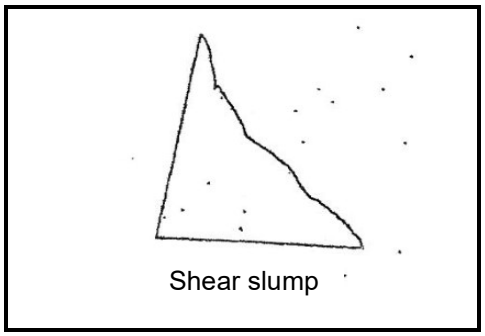

(3 × 2) (6)

4.4 Concrete is a mixture of cement, an aggregate of sand, broken stone and water. When it is allowed to set and harden, it takes the shape of the mould into which it has been placed. (2)

[20]

QUESTION 5

5.1
- It is a wall that consists of two skins or leaf
- with a cavity space between the inner leaf and outer leaf.
- The two skins are tied together by wall ties. (3)

5.2
- Fine-axed arch
- Rough arch
- Flat arch
- Segmental arc
- Semicircular arch (5)

5.3

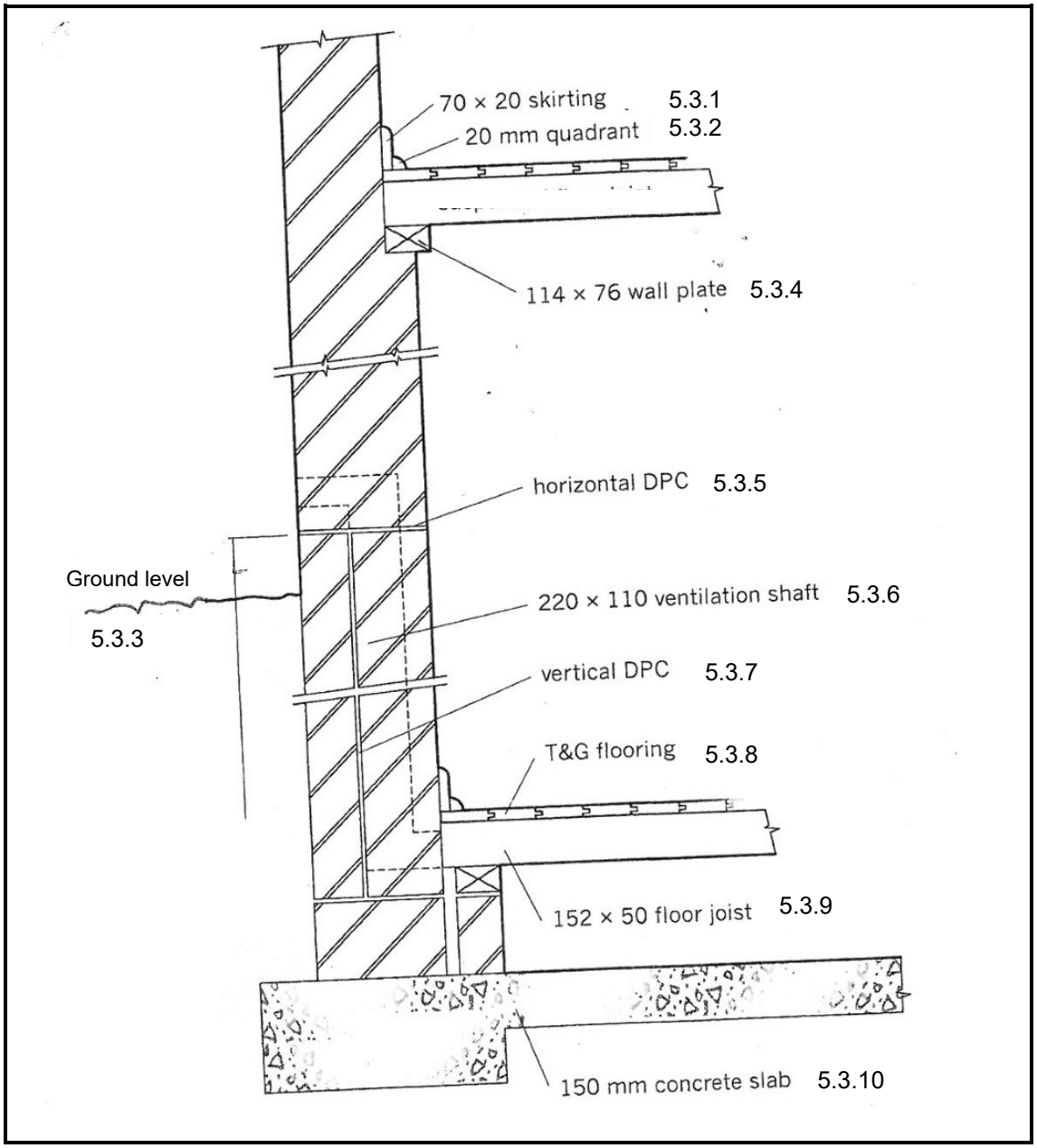

(Marks are only given for naming as well as dimensions of the parts indicated.)(10 × 1) (10)

5.4 Segregation is the separation of cement paste and aggregates during the transport of concrete. (2)

[20]

TOTAL: 100

Copyright reserved