higher education & training

Department:
Higher Education and Training
REPUBLIC OF SOUTH AFRICA

NATIONAL CERTIFICATE: MULTIDISCIPLINARY DRAWING OFFICE PRACTICE

MECHANICAL DRAUGHTING

(8090244)

20 November 2023 (X-paper)
09:00–13:00

Drawing instruments and nonprogrammable calculators may be used.

This question paper consists of 4 pages and 3 diagram sheets.

005Q1E2320

Copyright reserved

DEPARTMENT OF HIGHER EDUCATION AND TRAINING
REPUBLIC OF SOUTH AFRICA

NATIONAL CERTIFICATE: MULTIDISCIPLINARY DRAWING OFFICE PRACTICE
MECHANICAL DRAUGHTING
TIME: 4 HOURS
MARKS: 100

INSTRUCTIONS AND INFORMATION

1. Answer all the questions.
2. Read all the questions carefully.
3. Number the answers according to the numbering system used in this question paper.
4. Use both sides of the DRAWING SHEET.
5. Print all candidate information in the title block in ink.
6. Do all drawings in pencil.
7. Draw a 15 mm border on both sides of the DRAWING SHEET.
8. Use your discretion for dimensions NOT given.
9. Use a 3 mm fillet radius for all radii NOT given.
10. All drawing work must comply with the SANS 0111-1990 Code of Practice.
11. Work neatly.

Copyright reserved

QUESTION 1: COMPRESSION SPRING

According to conventional representation and a scale of 1:1, draw an outside front view of a right-hand helical compression spring. The detail is as follows:

DATA

Outside diameter	:	86 mm
Lead	:	22 mm
Free length	:	100 mm
Wire size	:	10 mm

[10]

QUESTION 2: DISC CAM

A cam profile is required, which will impart motion to a knife edge follower. According to scale of 1:1, draw a full profile of the disc-cam using the following information:

CAM DATA

Minimum diameter	:	32 mm
Stroke height (lift/fall)	:	42 mm
Performance	:	Rises 42 mm in 180° of cam rotation according to uniform acceleration and retardation, dwells for the next 90° of cam rotation. Falls 42 mm in the next 90° of cam rotation according to constant velocity. Rotation of a cam is anti-clockwise.

Show a displacement diagram and ALL construction lines. The displacement diagram must be drawn on the left-hand side of the cam profile. The knife edge follower need NOT to be drawn.

[15]

QUESTION 3: SECTIONAL DRAWING

FIGURE 1, DIAGRAM SHEET 1 (attached) shows two views of a machined casting. According to scale of 1:1 and in first-angle orthographic projection, draw the following views of the machined casting:

3.1 A sectional front view on cutting plane Y-Y. (9)

3.2 A sectional top view on cutting plane X-X. (9)

Insert ONLY the following symbols and dimensions on the drawing:

At A: A surface texture with a roughness value of 25 micrometres must be produced by machining. (1)

At B: No machining is allowed. (1)

[20]

Copyright reserved

QUESTION 4: DETAIL DRAWING

FIGURE 2, DIAGRAM SHEET 2 (attached) shows two views of a valve which consists of the following:

Item 1 : Body
Item 2 : Cylinder
Item 3 : Plunger
Item 4 : Hexagon head bolt

According to scale 1:2 and in first-angle orthographic projection, draw detail drawings of the following components:

4.1 The body (Item 1) showing the following:

- A full sectional front view (8)
- A sectional top view on cutting plane X-X (8)

4.2 The plunger (Item 3) showing the following:

- A front view (4)

NO dash lines required. **[20]**

QUESTION 5: ASSEMBLY DRAWING

FIGURE 3, DIAGRAM SHEET 3 (attached) shows the components of a control valve drawn in first-angle orthographic projection. The complete list of parts is as follows:

Item 1	Body	1 of	Cast steel
Item 2	Flange	1 of	Mild steel
Item 3	Handle	1 of	Cast steel
Item 4	Spindle	1 of	Mild steel
Item 5	M12 stud	1 of	Mild steel
Item 6	M12 hexagon nut	1 of	Mild steel

According to scale 1:1, draw an assembly drawing showing a sectional front view on cutting plane X-X with the control valve in the closed position. (30)

Layout, neatness and general impression of the ANSWER SHEET. (5)

Item numbers must be indicated on the assembly drawing.

Number the various items on your assembly drawing and provide a parts list using the following headings:

ITEM NAME NUMBER PER ASSEMBLY MATERIAL REMARKS

[35]

TOTAL: 100

Copyright reserved

DIAGRAM SHEET 1

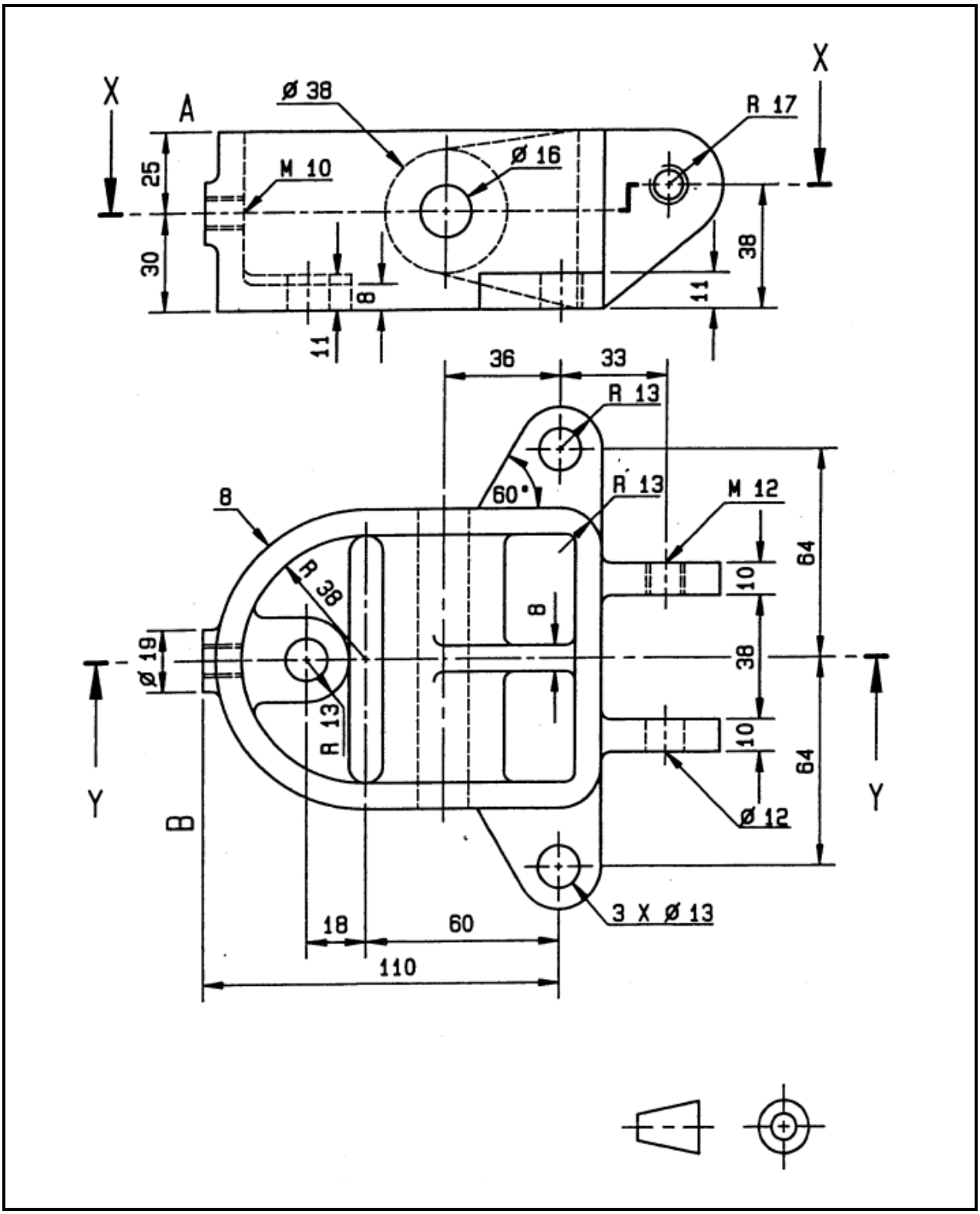

FIGURE 1

Copyright reserved

DIAGRAM SHEET 2

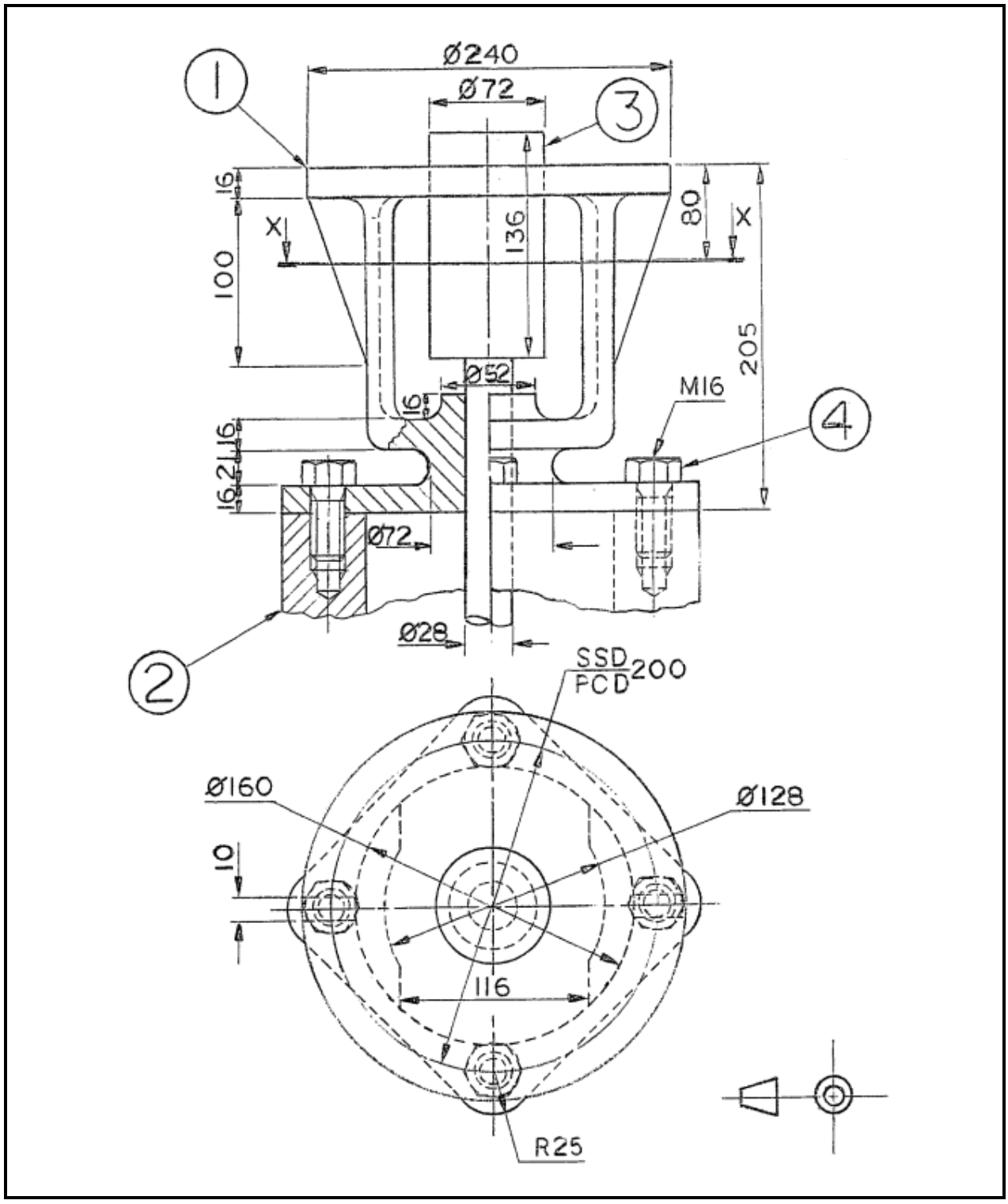

FIGURE 2

Copyright reserved

DIAGRAM SHEET 3

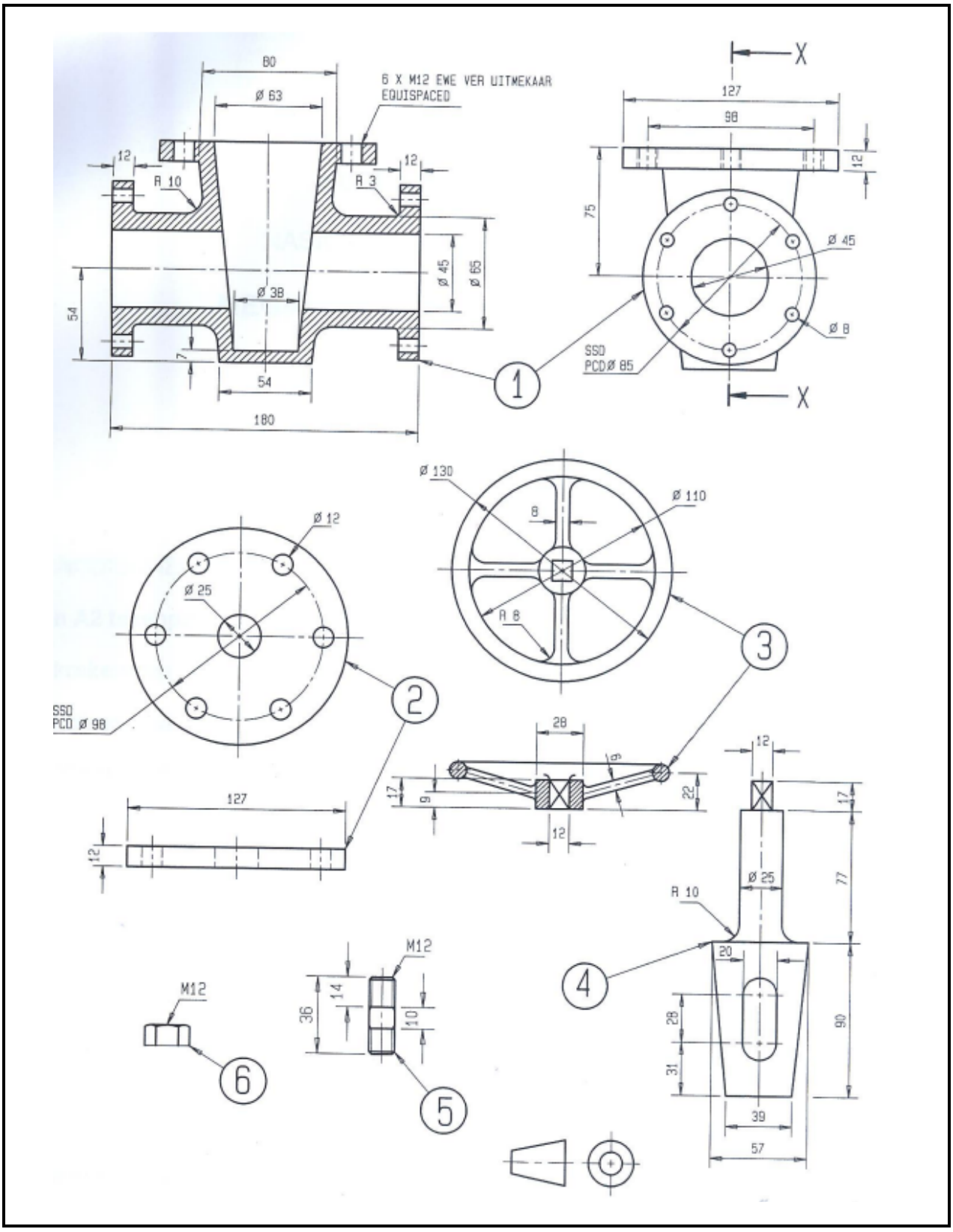

FIGURE 3

Copyright reserved