higher education & training

Department:
Higher Education and Training
REPUBLIC OF SOUTH AFRICA

NATIONAL CERTIFICATE: MULTI-DISCIPLINARY DRAWING OFFICE PRACTICE

GENERAL DRAUGHTING

(8090194)

1 December 2022 (X-paper)
09:00–13:00

CLOSED-BOOK EXAMINATION

REQUIREMENTS: ONE A2 drawing sheet

Drawing instruments may be used.

This question paper consists of 4 pages and 4 diagram sheets.

304Q1E2201

Copyright reserved

DEPARTMENT OF HIGHER EDUCATION AND TRAINING
REPUBLIC OF SOUTH AFRICA

NATIONAL CERTIFICATE: MULTI-DISCIPLINARY DRAWING OFFICE PRACTICE
GENERAL DRAUGHTING
TIME: 4 HOURS
MARKS: 100

INSTRUCTIONS AND INFORMATION

1. Answer all the questions.
2. Read all the questions carefully.
3. Number the answers correctly according to the numbering system used in this question paper.
4. All drawings must be large, clear, neat and in good proportion.
5. Estimate any dimension not given.
6. Start each question on a new page.
7. Use only a blue or black pen.
8. Write neatly and legibly.

Copyright reserved

QUESTION 1: LOCI

1.1 DIAGRAM SHEET 1 (attached) shows information to draw a right-handed auger that must show 1,5 revolutions with a starting point at P.

The pitch is 60 mm, and the core diameter is 40 mm. The nominal diameter is 80 mm.

Show ALL the geometric construction lines and hidden details.

1.2 DIAGRAM SHEET 1 (attached) also shows the specifications needed to draw TWO full right-handed turns of a helical spring.

Outside diameter: 80 mm
Lead: 120 mm
Bar size: R5

Show ALL construction lines but no hidden details. **[15]**

QUESTION 2: ORTHOGRAPHIC PROJECTION

DIAGRAM SHEET 2 (attached) shows the front view and an auxiliary view of a right, regular hexagonal pyramid with a cylindrical hole.

Draw, to scale 1:1 and in third-angle orthographic projection, the following views:

2.1 The given views (4)

2.2 A top view (10)

2.3 A right view (10)

2.4 Insert the projection symbol. (1)

[25]

QUESTION 3: GEOMETRICAL CONSTRUCTION

DIAGRAM SHEET 3 (attached) shows the front view of a machine part.

3.1 Draw the given view to scale 1:1. (20)

3.2 Insert only THREE dimensions (any ONE linear, ONE radial and ONE diametrical dimension) (3)

3.3 Print the following title and scale centrally beneath the completed drawing:

MACHINE PART
SCALE 1:1 (2)

[25]

Copyright reserved

QUESTION 4: INTERPENETRATION AND DEVELOPMENT

DIAGRAM SHEET 4 (attached) shows incomplete cylindrical pipes (A) and (B) intersecting each other.

4.1	Draw the given views and complete the point of interpenetration.	(15)
4.2	Develop the pattern of pipe A from XX.	(10)
4.3	Develop the pattern of pipe B from YY. Show ALL construction lines.	(10) **[35]**

TOTAL: 100

Copyright reserved

DIAGRAM SHEET 1

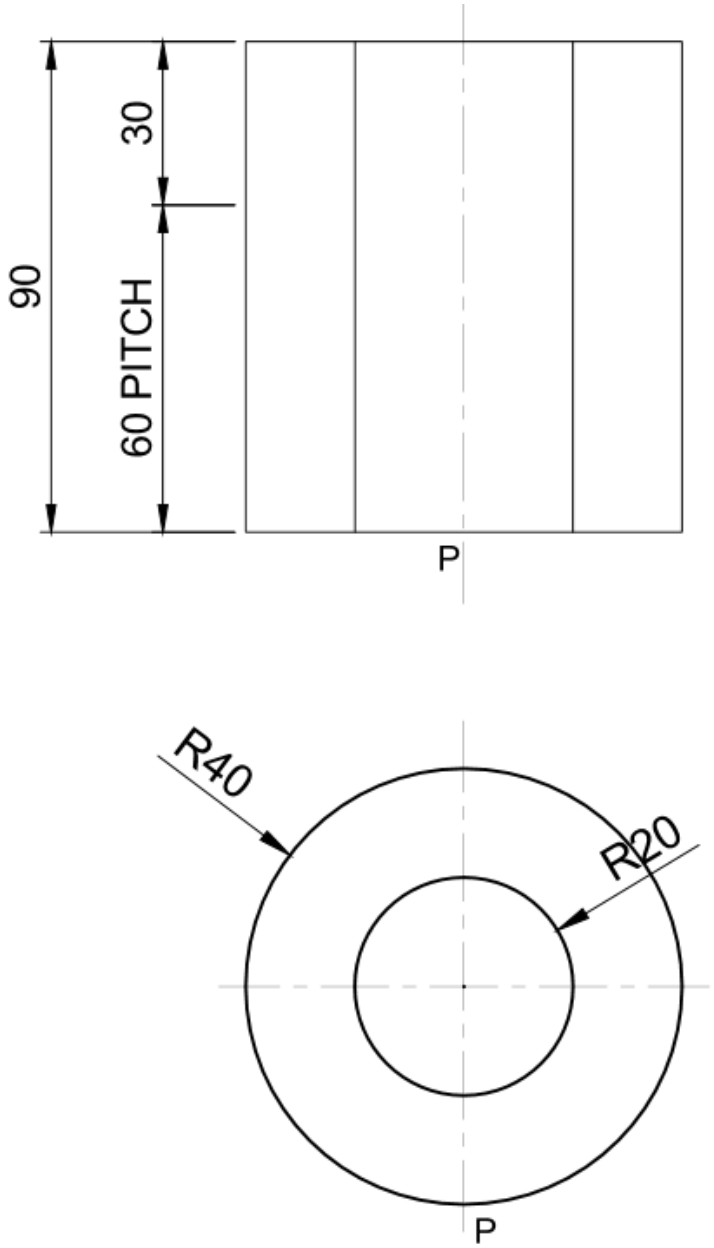

FIGURE 1

Copyright reserved

DIAGRAM SHEET 2

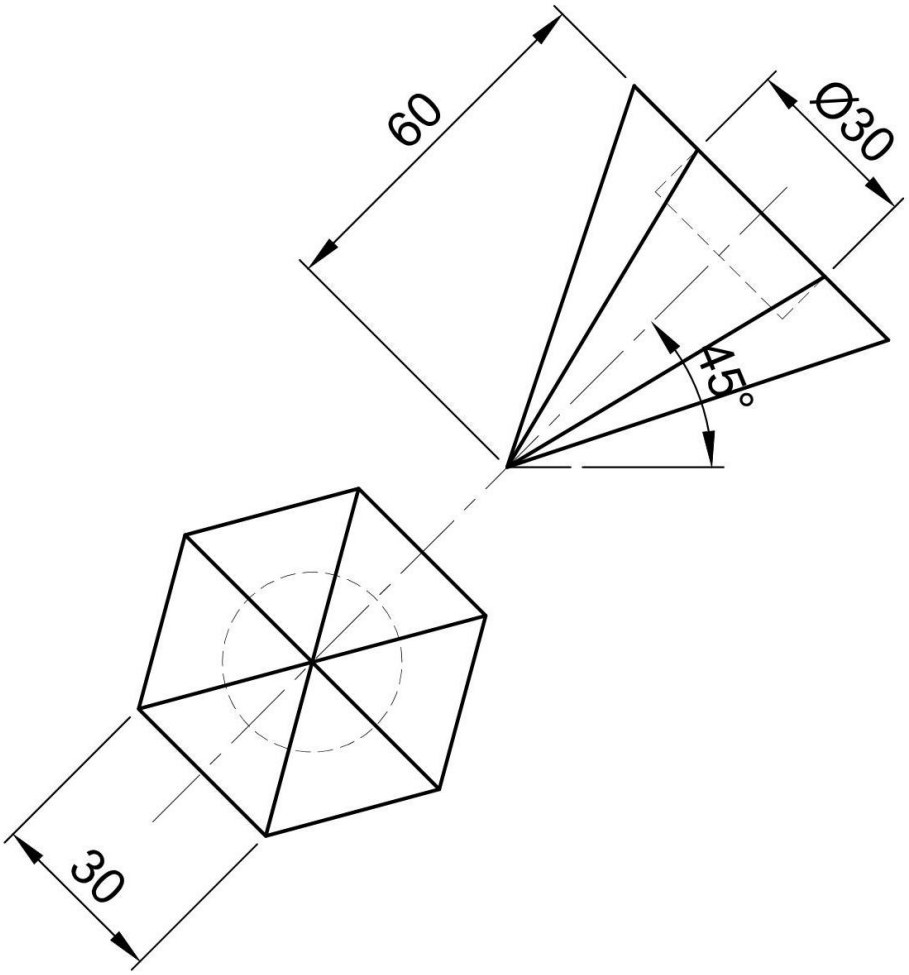

FIGURE 2

Copyright reserved

DIAGRAM SHEET 3

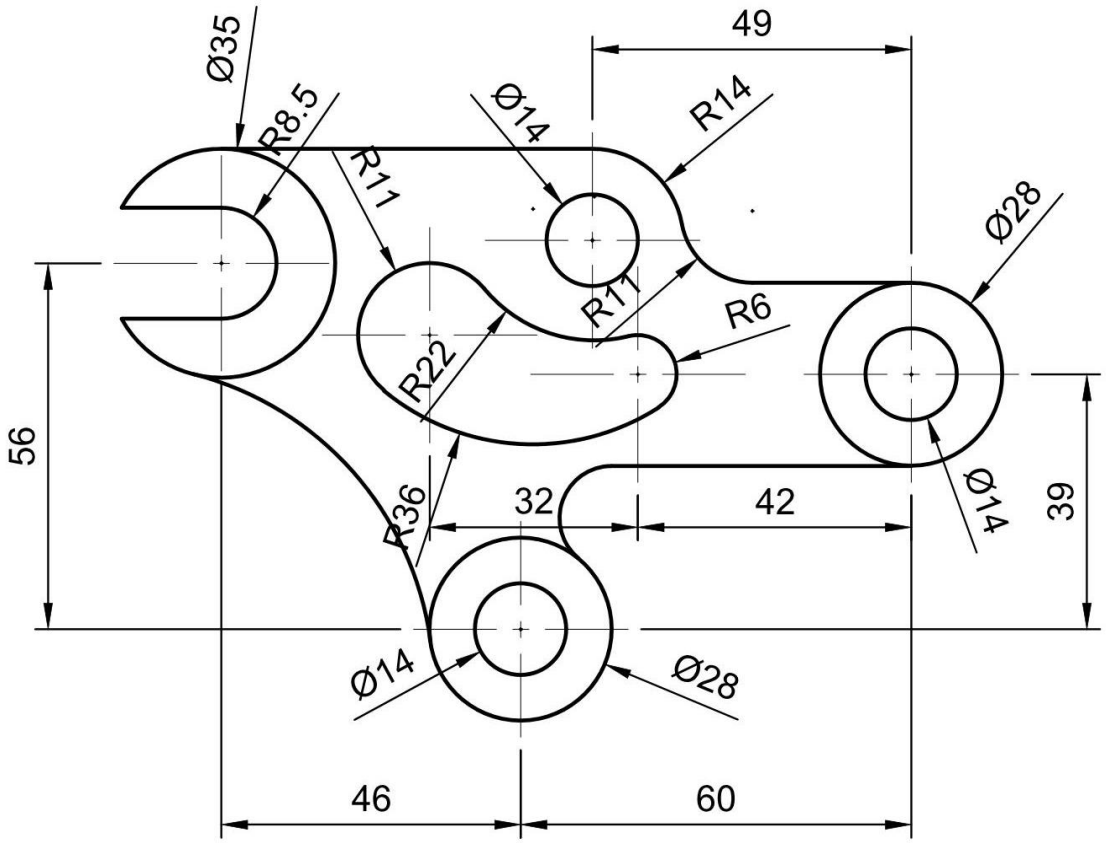

FIGURE 3

DIAGRAM SHEET 4

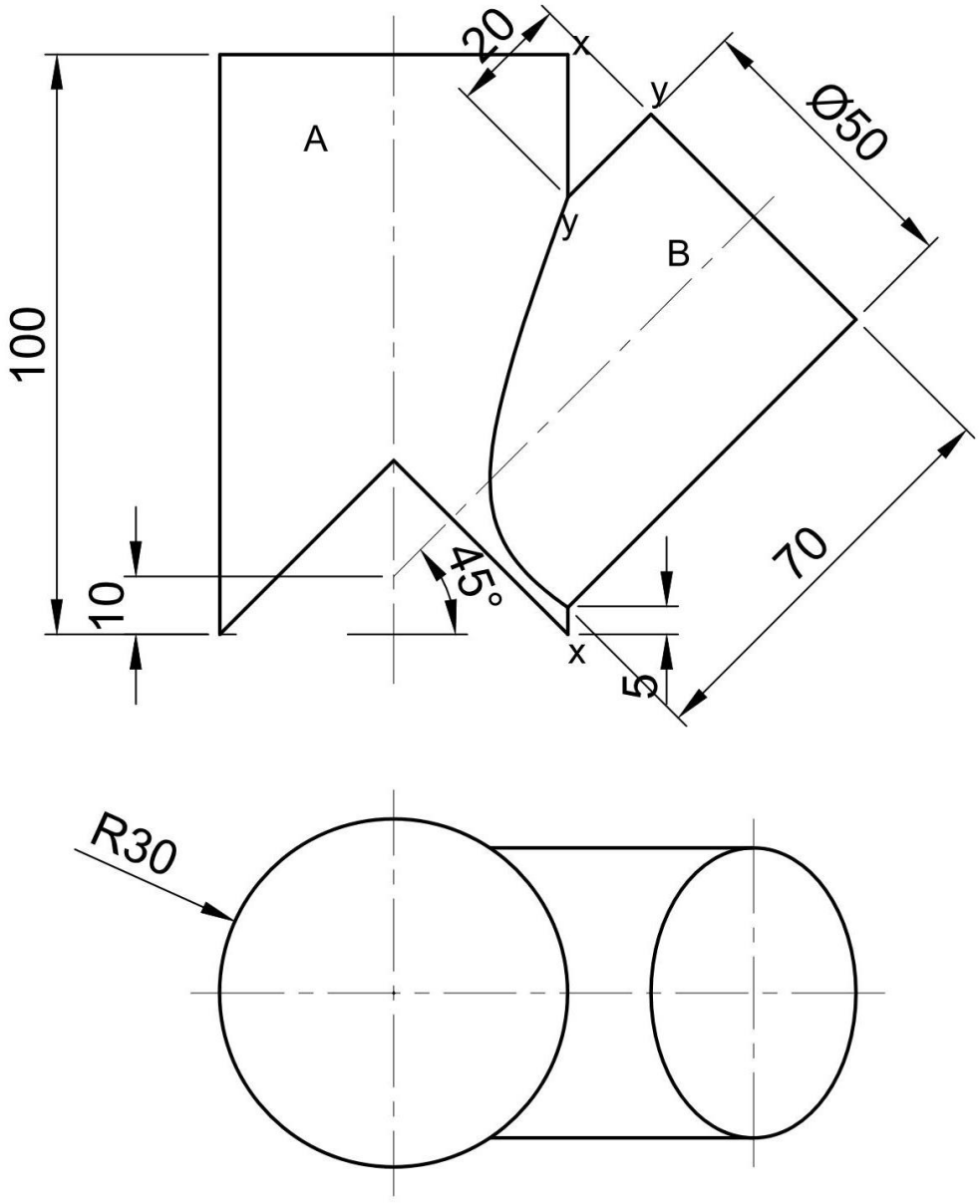

FIGURE 4

Copyright reserved