higher education & training

Department:
Higher Education and Training
REPUBLIC OF SOUTH AFRICA

MARKING GUIDELINE

NATIONAL CERTIFICATE: MULTI-DISCIPLINARY DRAWING OFFICE PRACTICE

GENERAL DRAUGHTING

1 December 2022

This marking guideline consists of 6 pages.

Copyright reserved

QUESTION 1

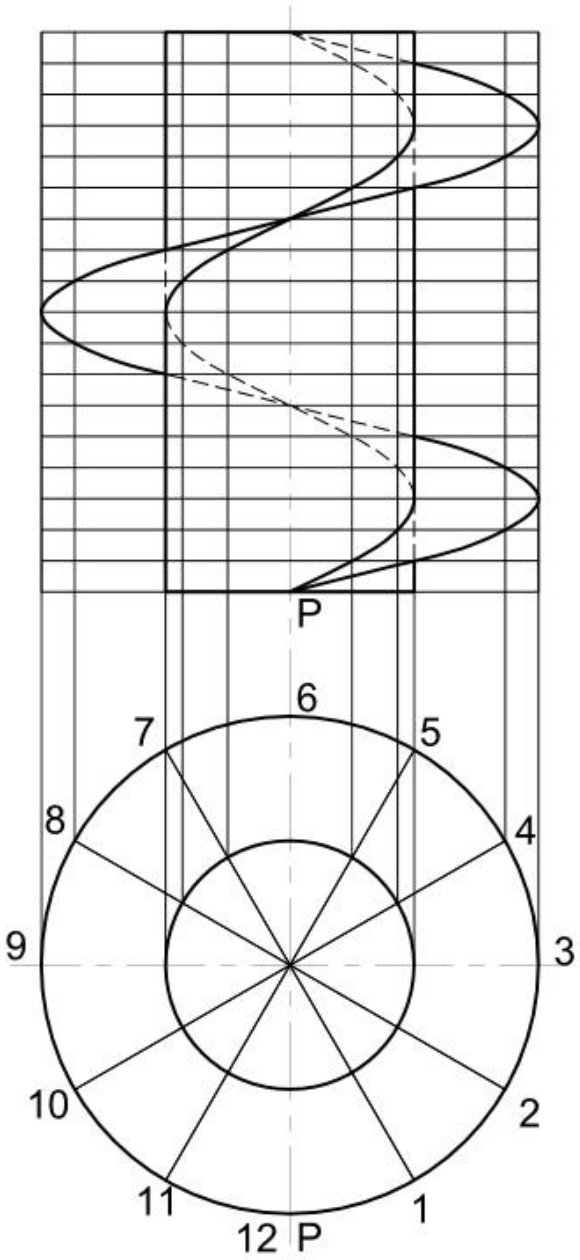

CORRECTNESS	8
ACCURACY	3
LINEWORK	2
LAYOUT	2
TOTAL	15

Copyright reserved

QUESTION 2

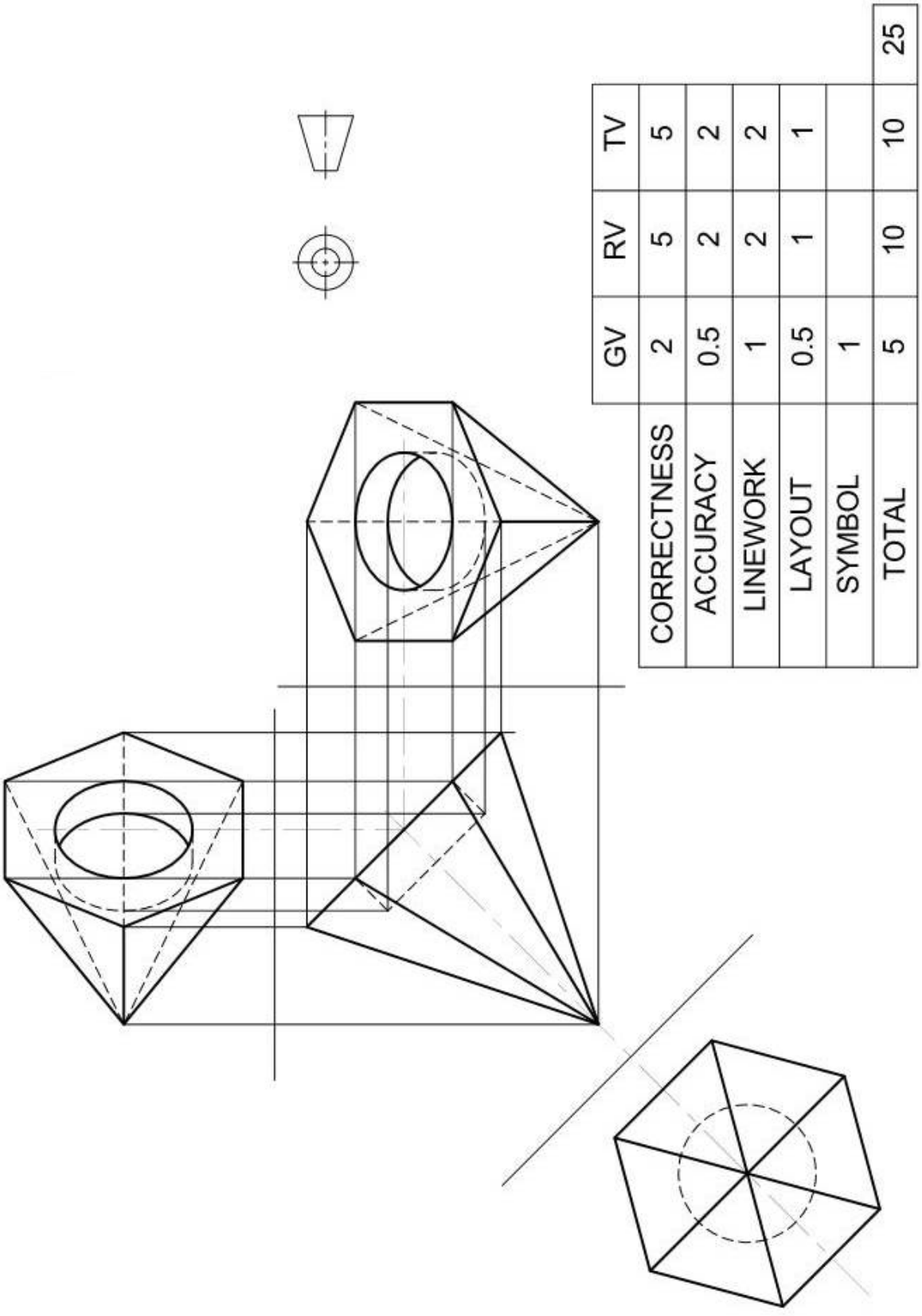

	GV	RV	TV
CORRECTNESS	2	5	5
ACCURACY	0.5	2	2
LINEWORK	1	2	2
LAYOUT	0.5	1	1
SYMBOL	1		
TOTAL	5	10	10

25

QUESTION 3

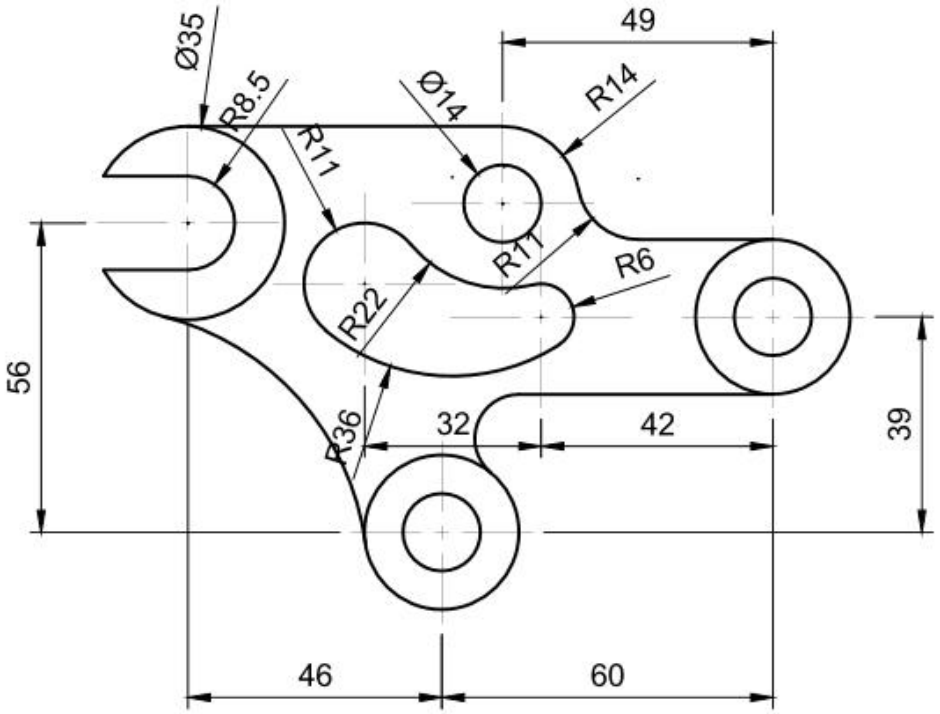

MACHINE PART
SCALE 1:1

CORRECTNESS	11
ACCURACY	5
LINEWORK	4
DIMENSIONS	3
TITLE & SCALE	2
LAYOUT	1
TOTAL	25

Copyright reserved

QUESTION 4

4.1

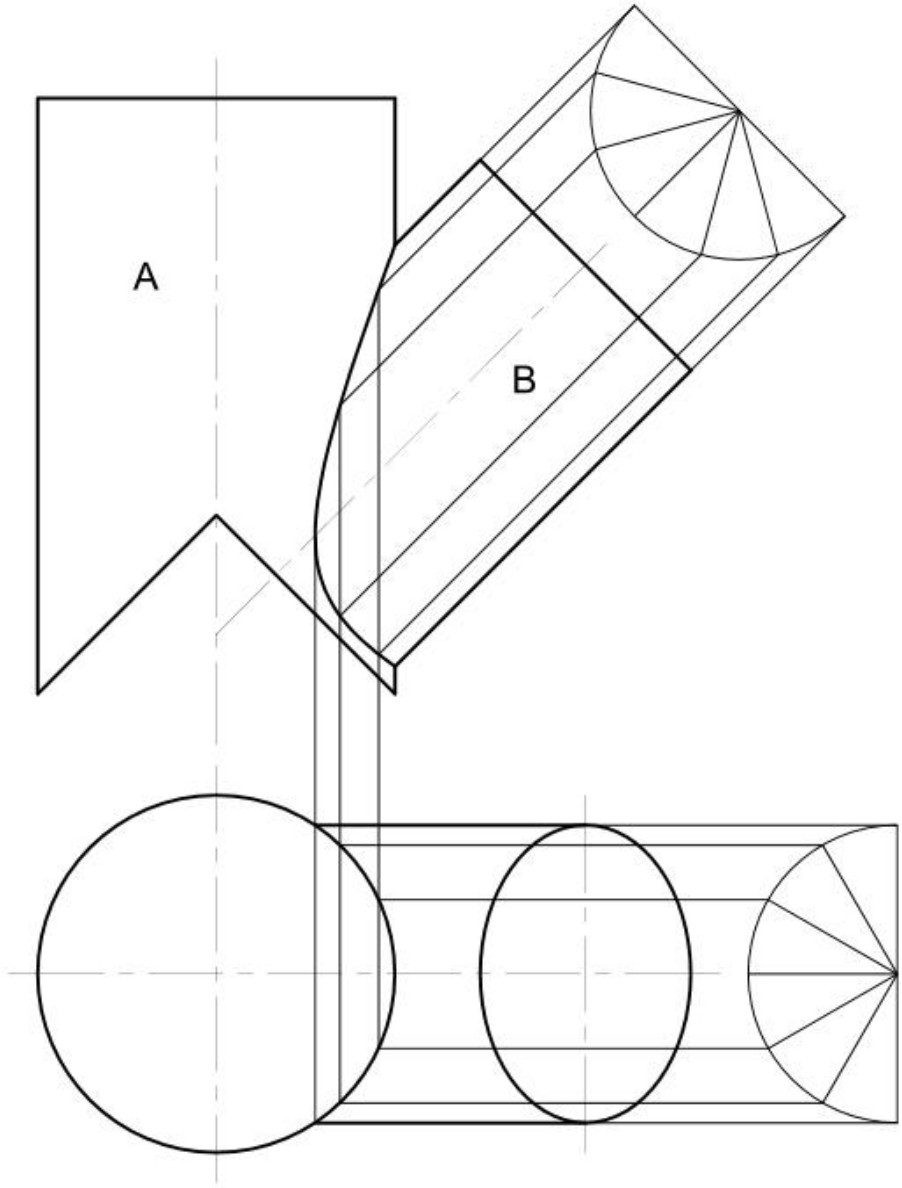

	GV	INT	
CORRECTNESS	2	6	
ACCURACY	1	2	
LINEWORK	0.5	2	
LAYOUT	0.5	1	
TOTAL	4	11	15

4.2
&
4.3

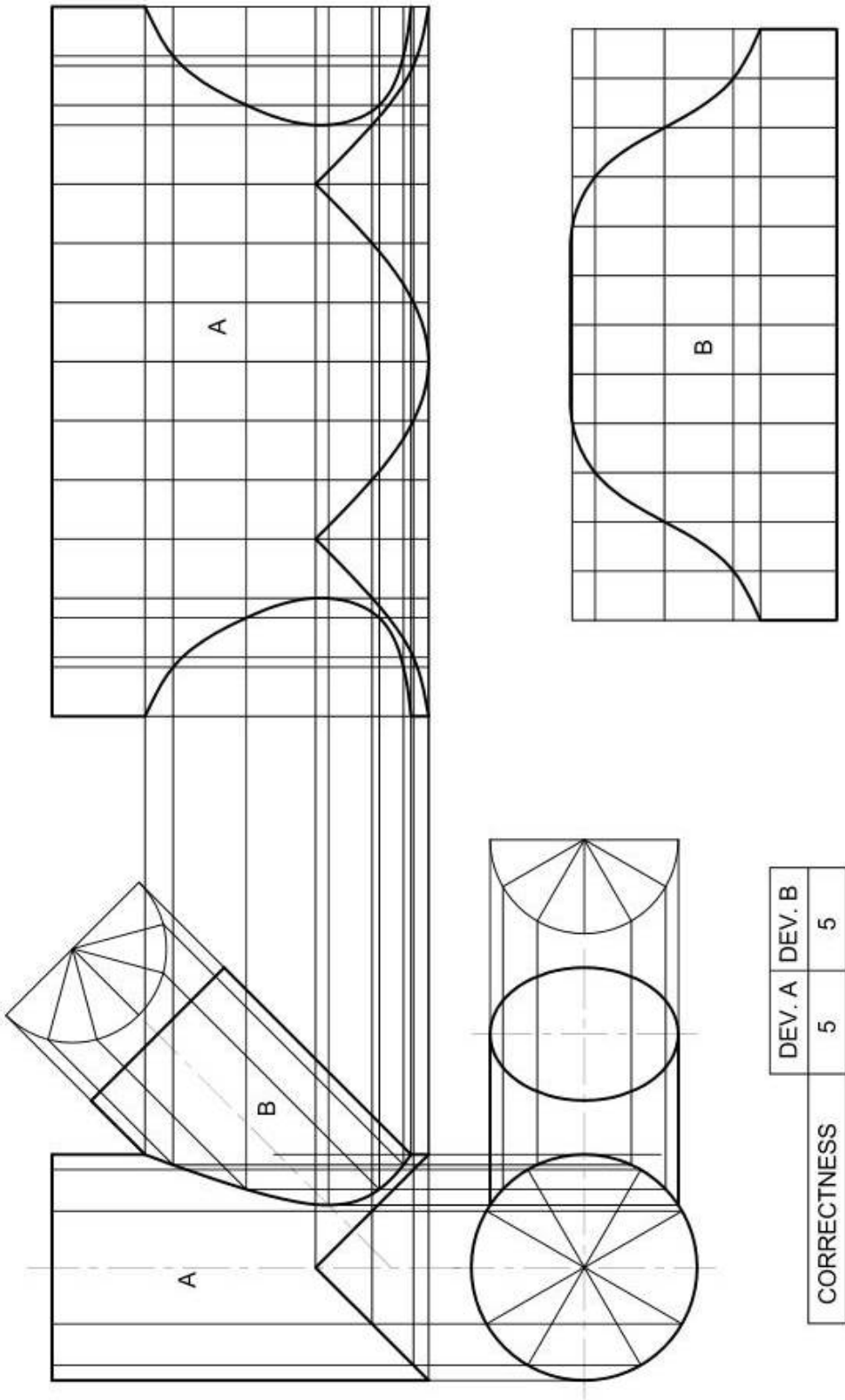

	DEV. A	DEV. B	
CORRECTNESS	5	5	
ACCURACY	2	2	
LINEWORK	2	2	
LAYOUT	1	1	
TOTAL	10	10	20

TOTAL: 100

Copyright reserved