higher education & training

Department:
Higher Education and Training
REPUBLIC OF SOUTH AFRICA

NATIONAL CERTIFICATE: MULTIDISCIPLINARY DRAWING OFFICE PRACTICE

GENERAL DRAUGHTING

(8090194)

7 December 2023 (X-paper)
09:00–13:00

This question paper consists of 4 pages and 4 diagram sheets.

299Q1G2307

Copyright reserved

DEPARTMENT OF HIGHER EDUCATION AND TRAINING
REPUBLIC OF SOUTH AFRICA

NATIONAL CERTIFICATE: MULTIDISCIPLINARY DRAWING OFFICE PRACTICE
GENERAL DRAUGHTING
TIME: 4 HOURS
MARKS: 100

INSTRUCTIONS AND INFORMATION

1. Answer all the questions.
2. Read all the questions carefully.
3. Number the answers according to the numbering system used in this question paper.
4. Only the candidate information on the drawing sheet must be done in pen. All other drawing work must be done in pencil.
5. All work must conform to the latest SANS 10111 Code of Practice for Engineering Drawing.
6. Work neatly.

Copyright reserved

QUESTION 1: HELIX

FIGURE 1, DIAGRAM SHEET 1 (attached), shows the front view of a cone with a height of 72 mm and a circular base with a diameter of 72 mm.

☆

1.1 Draw a conical helix, and represent only ONE revolution from point P in an anti-clockwise direction. (7½)

1.2 Project the top view of the conical helix. Construction lines must be shown. (7½)

[15]

QUESTION 2: ORTHOGRAPHIC PROJECTION

FIGURE 2, DIAGRAM SHEET 2 (attached), shows the front and auxiliary views of a truncated right regular hexagonal pyramid with a centrally placed right square pyramidal hole.

Draw to scale 1:1, and in third-angle orthographic projection, the following views of the solid:

2.1 The given front view (5)

2.2 A top view (10)

2.3 A right view (10)

All hidden details and necessary construction lines must be shown.

[25]

☆

QUESTION 3: GEOMETRIC CONSTRUCTION

FIGURE 3, DIAGRAM SHEET 3 (attached), shows a model of a mechanical template.

3.1 Draw the given view of the template to scale 1:1. (18)

3.2 Print the title and scale. (2)

3.3 Insert dimensions (TWO angular, TWO linear, and ONE radial dimension). (5)

[25]

☆

Copyright reserved

QUESTION 4: INTERPENETRATION AND DEVELOPMENT

FIGURE 4, DIAGRAM SHEET 4 (attached), shows the incomplete front and top views of a regular square prism that has been shaped to fit around a right regular hexagonal prism. The axes of both prisms lie on the common vertical plane. The auxiliary view of the square prism is also given.

Draw to scale 1:1, and in first-angle orthographic projection, the following views of the solid:

4.1	The given top view	(6)
4.2	The left view	(5)
4.3	The complete front view showing the curve of interpenetration	(14)
4.4	Develop the surface of the square prism	(10)

Show all the hidden details.

[35]

TOTAL: 100

Copyright reserved

DIAGRAM SHEET 1

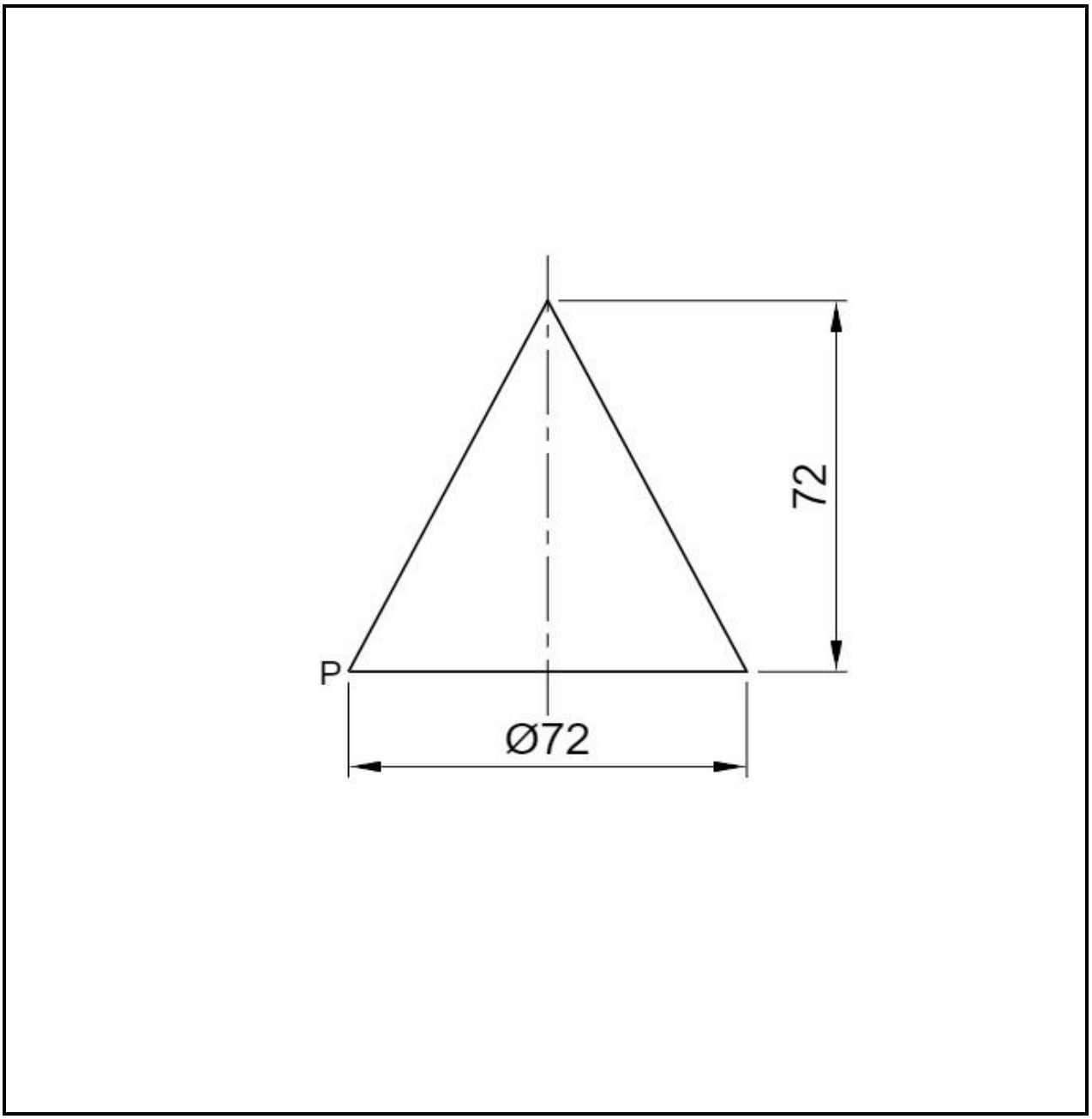

FIGURE 1

Copyright reserved

DIAGRAM SHEET 2

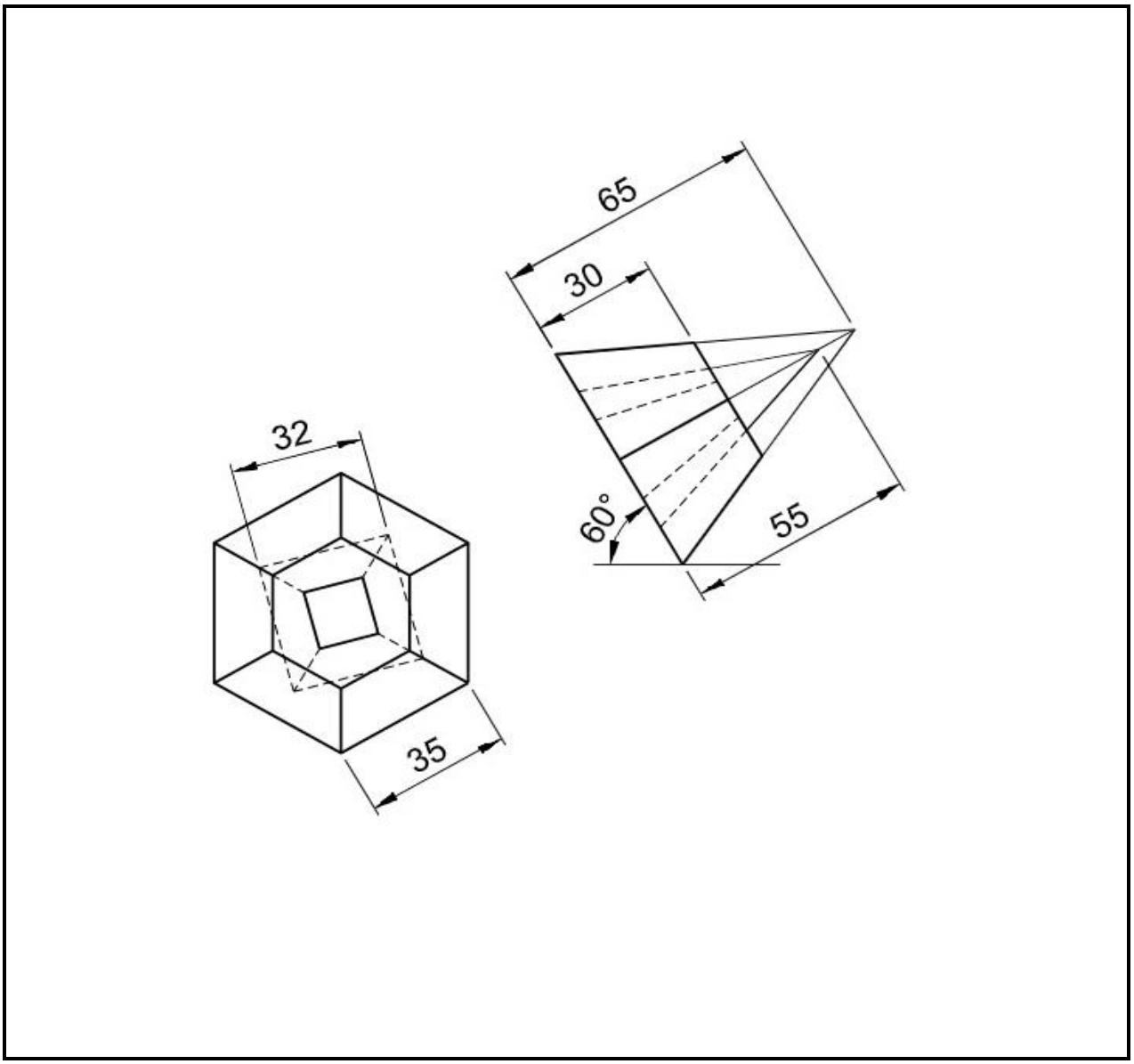

FIGURE 2

Copyright reserved

DIAGRAM SHEET 3

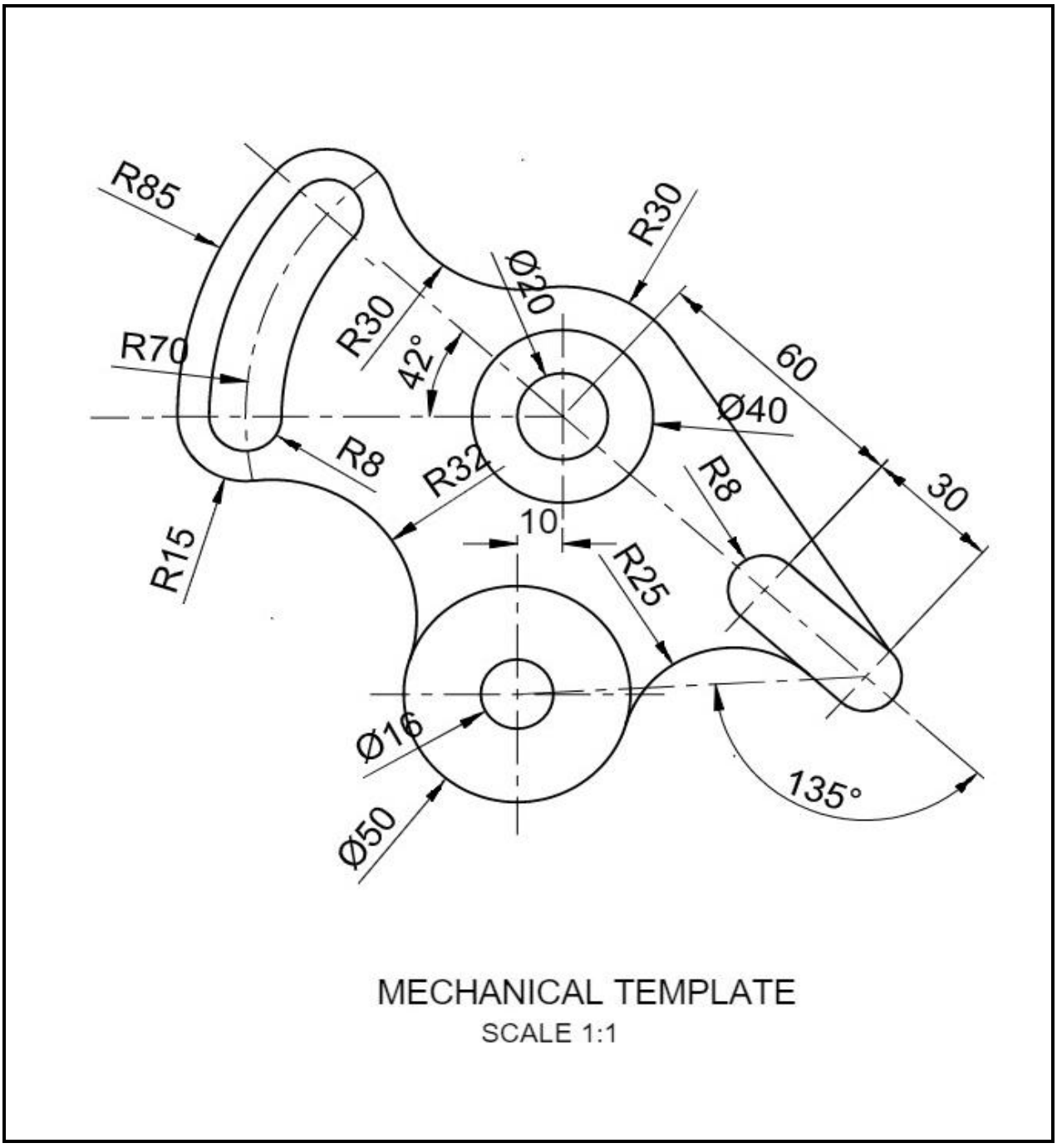

FIGURE 3

DIAGRAM SHEET 4

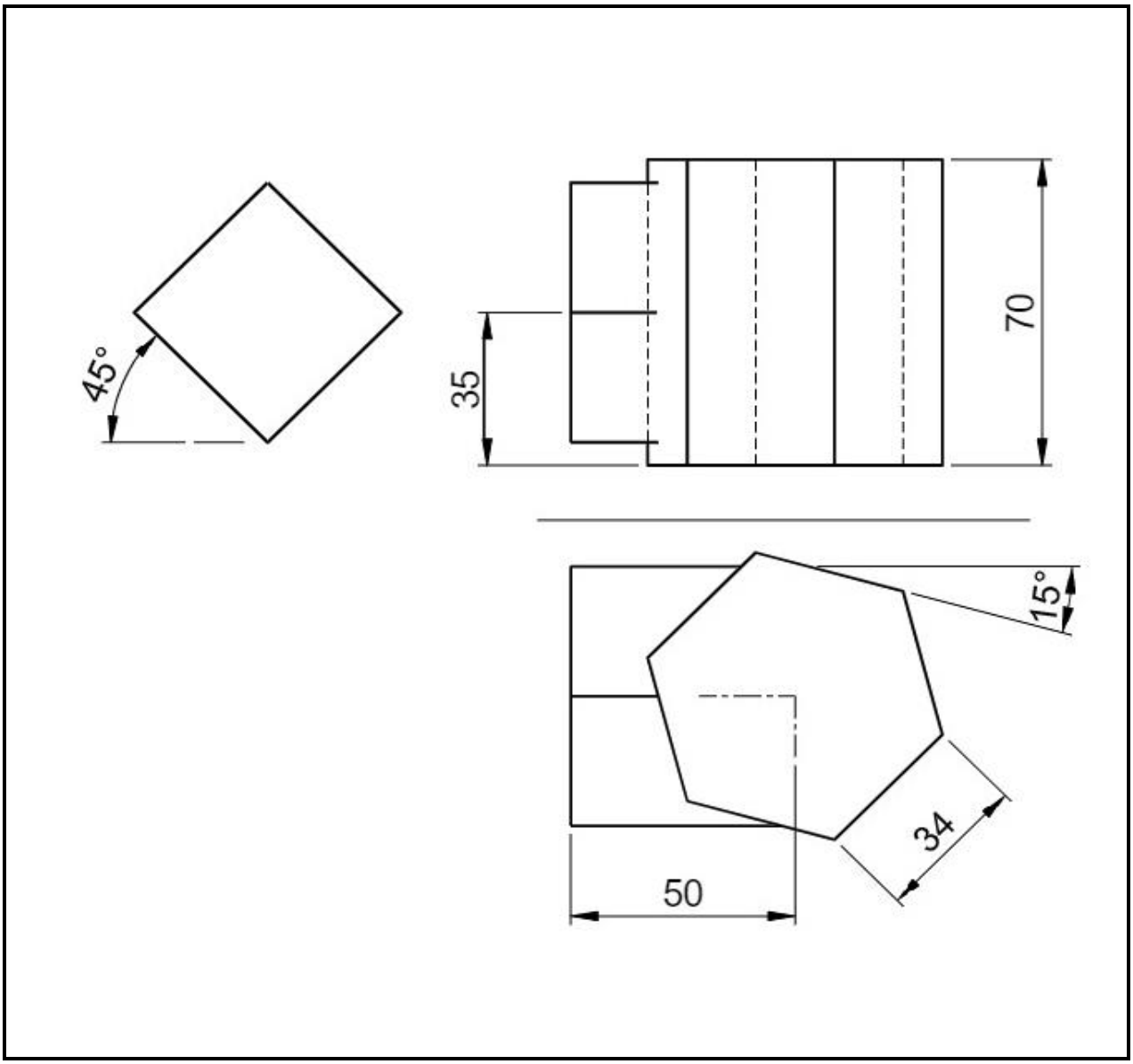

FIGURE 4

Copyright reserved