higher education & training

Department:
Higher Education and Training
REPUBLIC OF SOUTH AFRICA

NATIONAL CERTIFICATE (VOCATIONAL)

ROBOTICS FUNDAMENTALS

(Second paper)
NQF LEVEL 2

(10041052)

3 December 2024 (Y-paper)
13:00–17:00

This question paper consists of 6 pages and 1 addendum.

607Q2N2403

Copyright reserved

DEPARTMENT OF HIGHER EDUCATION AND TRAINING
REPUBLIC OF SOUTH AFRICA

NATIONAL CERTIFICATE (VOCATIONAL)
ROBOTICS FUNDAMENTALS
(Second paper)
NQF LEVEL 2
TIME: 4 HOURS
MARKS: 80

INSTRUCTIONS AND INFORMATION

1. Answer all the questions.

2. Read all the questions carefully.

3. NO INTERNET ACCESS IS ALLOWED IN THE EXAMINATION ROOM.

4. These questions must be completed on computer by using:
   - If required, Draw IO, or other suitable diagramming software for flowcharts and simple electrical diagrams.
   - Fritzing
   - Any applicable Python IDE (Python version 3 and above)
   - MS Word

   NO HANDWRITTEN code or HAND DRAWN diagrams will be marked!
   The microprocessor or microcontroller that could be implemented includes:
   - Raspberry Pi or Raspberry Pi Zero

     OR

   - Raspberry Pi PICO

5. Students must ensure that they print their work immediately after completion of a question. Ensure that your EXAMINATION NUMBER appears on EACH PRINTOUT. NO answers without a printed EXAMINATION NUMBER will be marked.

6. In the event of problems such as a power failure, computer or printer breakdown, the invigilator will make the necessary arrangements to continue with the examination process once the problem has been resolved. Students will not be penalised for time lost under these circumstances.

7. All work done on computer must be saved at regular intervals to prevent loss of work. NO additional time may be allowed to redo work lost due to not saving.

Copyright reserved

8. NO student may print his/her work for another student or make a memory stick available to another student or access another student's work on the network. Any attempt to access any information from or transfer information to another student in whatever manner is a contravention of the examination rules and regulations and will be viewed in an extremely serious light.

9. ALL PRINTOUTS or screen prints done during the session MUST be handed in.

10. Ensure that your EXAMINATION NUMBER appears on all PRINTOUTS.

11. Students may NOT copy the source code from the Python IDE code editor to MS Word and then print it from the word processor.

12. NO designs need to be built physically; all designs are only conceptually done.

13. Questions requiring coding are not marked strictly on syntax.

14. Study the ADDENDUM (attached) for PINOUT diagrams.

Copyright reserved

QUESTION 1

In a small community garden, residents have noticed that the water supply is sometimes not closed, which results in wastage of water and high utility costs. To prevent this, the community wants to build a simple water usage monitoring system to alert the gardener when the water supply is turned on for more than 5 minutes. The local TVET college has proposed a project where students will create a monitoring system with an alarm that sounds when the water supply exceeds the set time limit. **The system will have a red LED to indicate an alert state (water running too long) and a green LED to indicate a normal state (water off or within the time limit).**

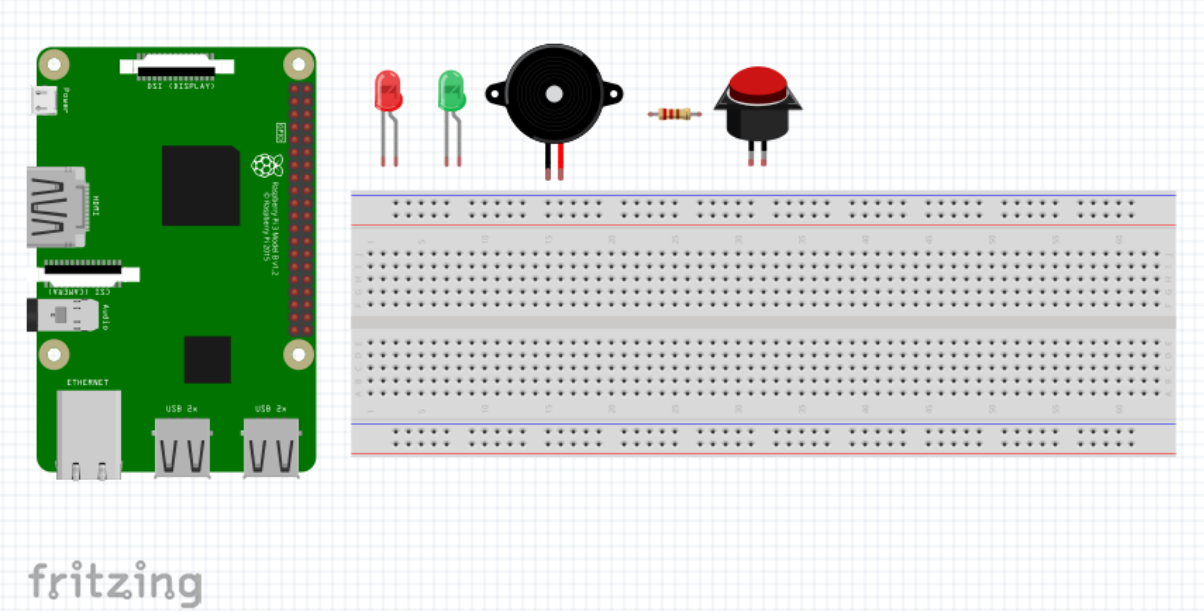

Students will create the home security alarm system using the following components:

- Raspberry Pi 4 or Pi Zero or Pi Pico
- LEDs (Red and Green)
- Buzzers (1)
- Resistors (220 Ω for LEDs)
- Breadboard
- Jumper wires
- Push button (for simulating alarm activation)

1.1 Use Fritzing software and the components above to create a breadboard circuit for the alarm system. (12)

1.2 Create a flowchart of the logic to be used in this project. (11)

1.3 SAVE and PRINT the breadboard circuit and flowchart. (2)

[25]

QUESTION 2

Analyse the Python code below and answers the questions that follow.

```
import RPi.GPIO as GPIO
import time

GPIO.setmode(GPIO.BCM)
led_pin = 17
GPIO.setup(led_pin, GPIO.OUT)

try:
    while True:
        GPIO.output(led_pin, GPIO.HIGH)
        print("LED ON")
        time.sleep(1)

        GPIO.output(led_pin, GPIO.LOW)
        print("LED OFF")
        time.sleep(1)

except KeyboardInterrupt:
    GPIO.cleanup()
    print("Program stopped and GPIO cleaned up.")
```

2.1 Open a Python development environment or text editor and create a new Python source file called Question2_EXAMINATION NUMBER.py (3)

2.2 Recreate the programme above. (10)

2.3 The code is missing comments. Add comments to the code to explain the source code. (10)

2.4 SAVE and PRINT the code from the IDE. (2)

[25]

QUESTION 3

Study the scenario below and answer the questions that follow.

As a robotics student you are required to design a signal system for a **smart classroom that uses three LEDs** to indicate different classroom statuses (such as "Do Not Disturb," "Break Time," and "Class in Session") using a Raspberry Pi.

- **Raspberry Pi**:
- **RED LED**: Indicates "Do Not Disturb" mode when exams or important presentations are in progress (connected to GPIO pin 3).
- **YELLOW LED**: Indicates "Break Time," allowing students to relax or have a short break (connected to GPIO pin 4).
- **GREEN LED**: Indicates "Class in Session," when normal classroom activities are taking place (connected to GPIO pin 5).
- **220 ohms resistors**

LED Sequence:
The **RED LED** turns on for 5 seconds to indicate "Do Not Disturb" mode.
After the RED LED turns off, the **YELLOW LED** turns on for 2 seconds to signal "Break Time."
Finally, the **GREEN LED** turns on for 5 seconds, indicating "Class in Session."
The cycle repeats based on the class schedule or manual control.

3.1 Use Fritzing software to create a circuit diagram connecting the LEDs to the Raspberry Pi's GPIO pins. (14)

3.2 Program the Raspberry Pi using a Python IDE (such as Thonny or PyCharm) to implement the LED control logic. (14)

3.3 SAVE and PRINT your work. (2)

[30]

TOTAL: 80

Copyright reserved

(10041052)

ADDENDUM

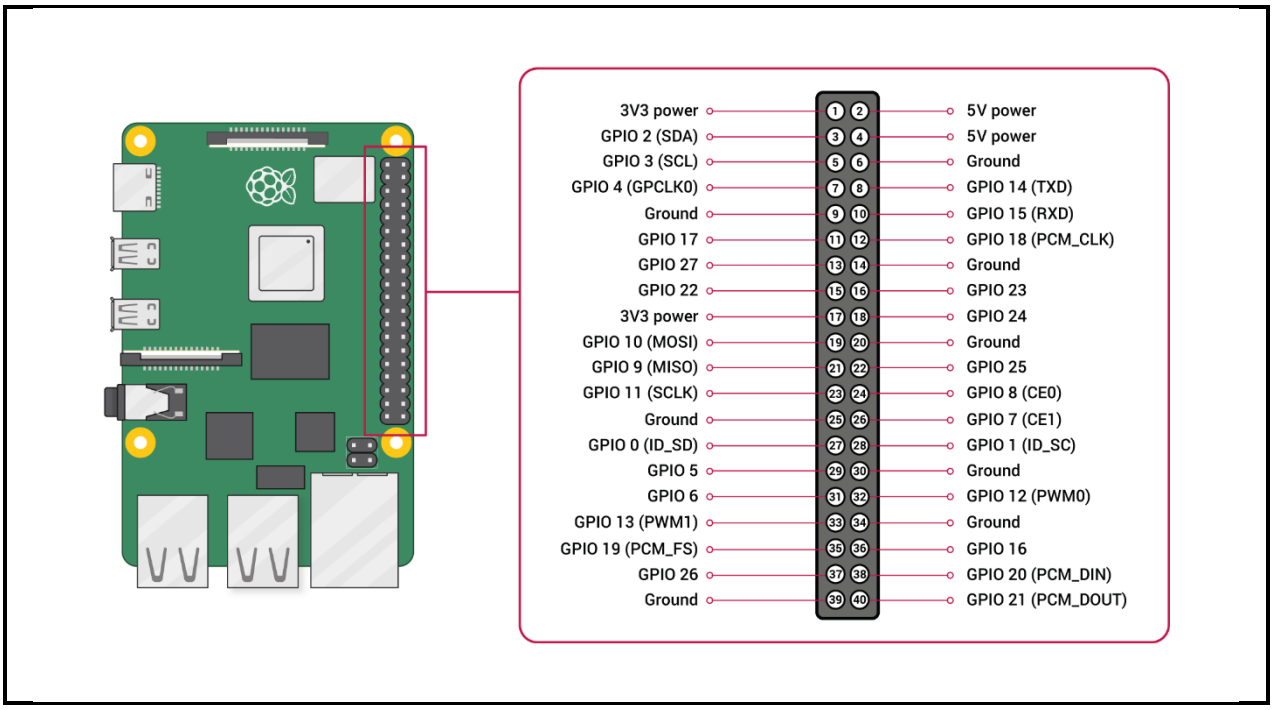

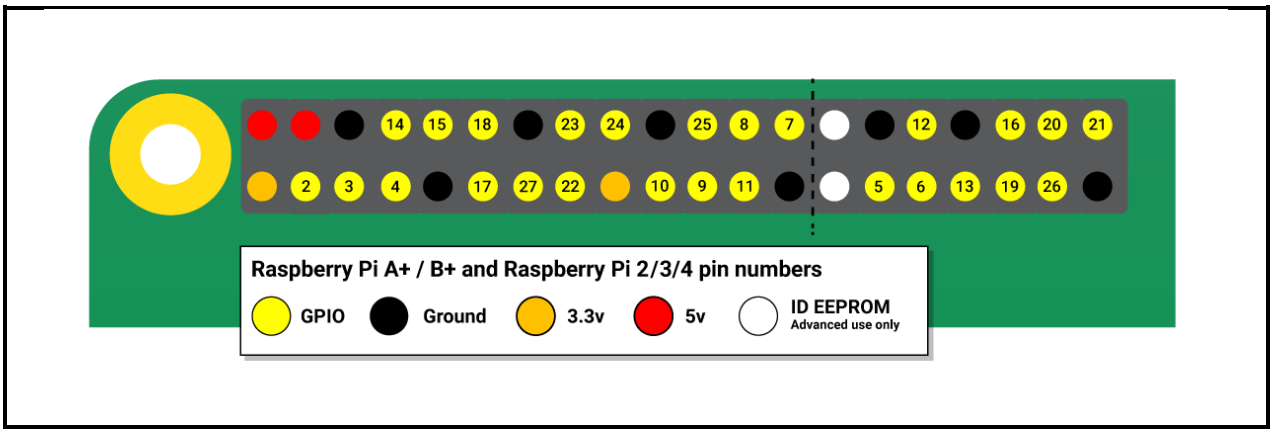

Copyright reserved