higher education & training

Department:
Higher Education and Training
REPUBLIC OF SOUTH AFRICA

NATIONAL CERTIFICATE (VOCATIONAL)

ELECTRICAL PRINCIPLES AND PRACTICE
NQF LEVEL 3

(12041003)

2 December 2024 (X-paper)
09:00–12:00

This question paper consists of 7 pages and a 2-page formula sheet.

581Q1N2402

Copyright reserved

DEPARTMENT OF HIGHER EDUCATION AND TRAINING
REPUBLIC OF SOUTH AFRICA

NATIONAL CERTIFICATE (VOCATIONAL)
ELECTRICAL PRINCIPLES AND PRACTICE
NQF LEVEL 3
TIME: 3 HOURS
MARKS: 100

INSTRUCTIONS AND INFORMATION

1. Answer all the questions.
2. Read all the questions carefully.
3. Number the answers according to the numbering system used in this question paper.
4. Use only a black or blue pen.
5. Write neatly and legibly.

Copyright reserved

QUESTION 1

1.1 Explain why an atom is electrically neutral. (2)

1.2 An atomic structure has 32 electrons.

1.2.1 Which element is represented by this atomic structure?

1.2.2 What is the atomic number of the element in QUESTION 1.2.1?

1.2.3 How many protons does the element in QUESTION 1.2.1 have? (3 × 1) (3)

1.3 Give an expression which can be used to determine the number of electrons in each shell for QUESTION 1.2. (2)

1.4 Calculate the resistance of a copper cable with a diameter of 10 mm and a length of 2 km. Take the resistivity of copper to be 0,173 micro-ohm meter. (4)

1.5 Explain why carbon has a *negative* temperature coefficient of resistance. (2)

1.6 Explain the relationship between *resistance* and *resistivity*. (2)

[15]

QUESTION 2

2.1 For a DC motor to operate, two conditions must be met.

Name TWO conditions that are necessary to produce a force on a conductor. (2)

2.2

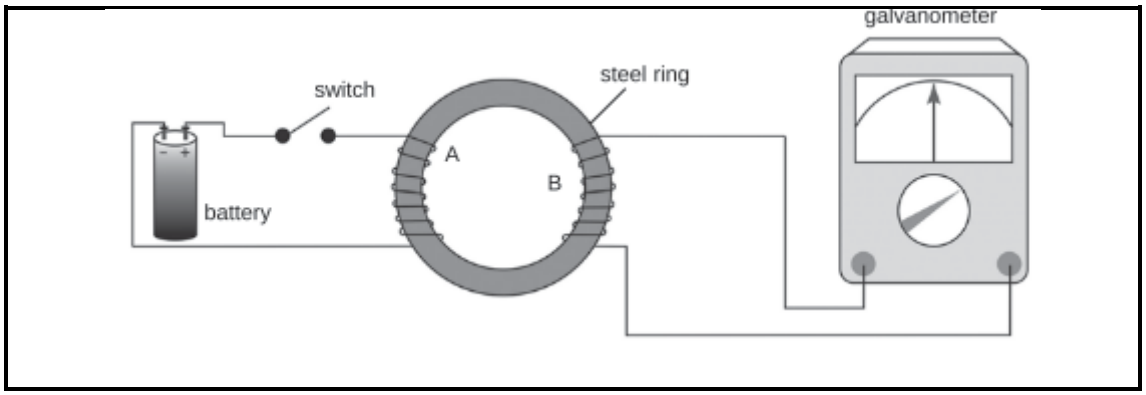

FIGURE 1

Refer to FIGURE 1 above to answer the following questions:

2.2.1 Which principle is represented by FIGURE 1? (1)

2.2.2 Explain what is meant by the principle in QUESTION 2.2.1. (2)

Copyright reserved

2.3 Explain the purpose of the following:

2.3.1 Screw rule (2)

2.3.2 Lenz's Law (1)

2.4 A magnetic circuit has a flux density of 0,5 T and a cross-sectional area of 100 cm^2.

Calculate the flux. (2)

2.5 A conductor that is 500 cm in length and carrying a current of 4 A is placed at right angles to a magnetic field. It experiences a force of 8 N.

Calculate:

2.5.1 The flux density of the field

2.5.2 The force, if the conductor is at an angle of 45° to the direction of the field

2.5.3 The induced EMF, if the conductor moves at a velocity of 10 m/s at an angle of 60° to the direction of the field

(3 × 2) (6)

2.6 Electric bells use electromagnets.

Name TWO practical applications of electric bells. (2)

2.7 A coil produces a magnetomotive force of 600 A when the current drawn from the supply is 5 A.

Calculate the number of turns on the coil. (2)

[20]

QUESTION 3

3.1 A battery with a total EMF of 12 V and a total internal resistance of 0,3 Ω is connected across a load with a resistance of 10 Ω.

Calculate the current flowing through the load. (3)

3.2 Classify each of the following capacitors as POLARISED or NON-POLARISED:

3.2.1 Tantalum

3.2.2 Polyester

(2 × 1) (2)

Copyright reserved

3.3 Apply Kirchhoff's law to determine the value of E_2 in FIGURE 2 below. (3)

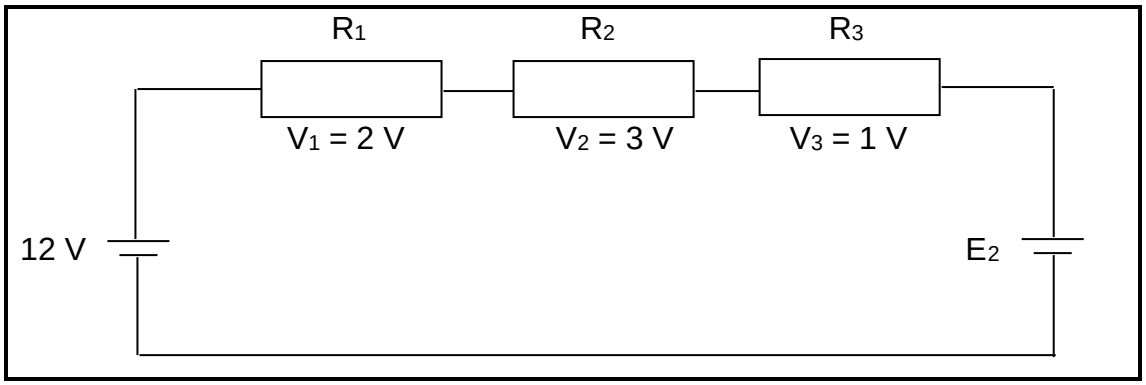

FIGURE 2

3.4 Explain what is meant by *inductance of a coil*. (2)

3.5 Name TWO types of AC power supply systems used in South Africa. (2)

3.6 Eight resistors, each with a resistance of 2 Ω, are connected in parallel.

3.6.1 Determine the *total resistance.* (2)

3.6.2 If ONE of the resistors is open circuit (blown), what will the total resistance of the circuit be? (2)

3.6.3 If there is a short circuit in ONE of the resistors, what will the total resistance of the circuit be? (1)

3.7 Cells and batteries are sources of DC voltage.

3.7.1 Name TWO types of alkaline cells. (2)

3.7.2 What type of battery is used in motorbikes? (1)

3.8 A three-phase 400 V star-connected AC motor has an input power of 20 kW at a power factor of 0,85.

Calculate:

3.8.1 The phase voltage (2)

3.8.2 The phase current of the motor (3)

3.9 With reference to windings, explain the difference between a *step-down transformer* and a *step-up transformer*. (2)

3.10 Name THREE main types of losses in a transformer. (3)

[30]

Copyright reserved

QUESTION 4

4.1 A moving-coil instrument with an internal resistance of 10 ohm gives a full-scale deflection when 2 mA passes through it.

Calculate:

4.1.1 The value of a shunt resistor required to be used with the instrument to measure a current of 1 A (3)

4.1.2 The value of a multiplier resistor required to be used with the instrument to measure the voltage up to 12 V (2)

4.2

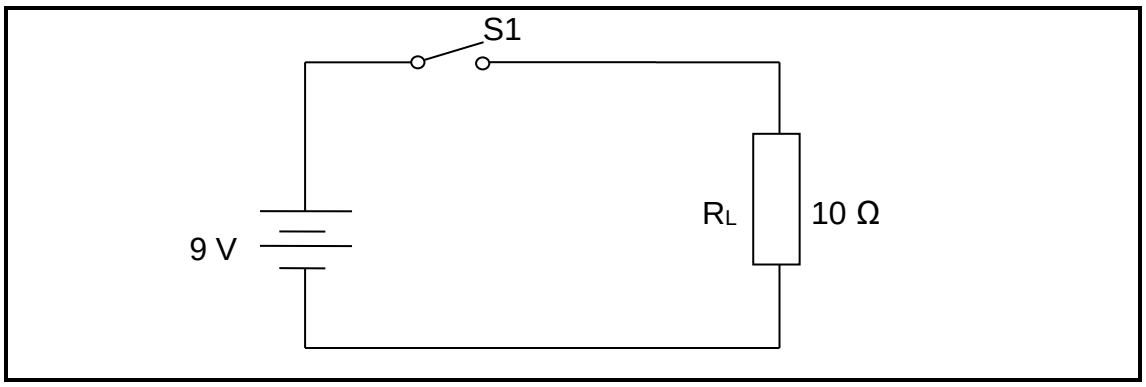

FIGURE 3

Refer to FIGURE 3 above, and answer the following questions:

4.2.1 Explain in FIVE steps how you would measure voltage across the 10-ohm resistor using a digital multimeter. (5)

4.2.2 Explain why you should observe the correct circuit polarity when measuring current with an ammeter. (1)

4.3 Which instrument would you use to give a visual indication of the presence of voltage by means of LED lights? (1)

4.4 List THREE methods used to measure power in a three-phase system. (3)

[15]

Copyright reserved

QUESTION 5

5.1 Name the THREE most common methods used to start 3-phase induction motors. (3)

5.2 Explain the difference between *cumulative* and *differential compound motors*. (2)

5.3

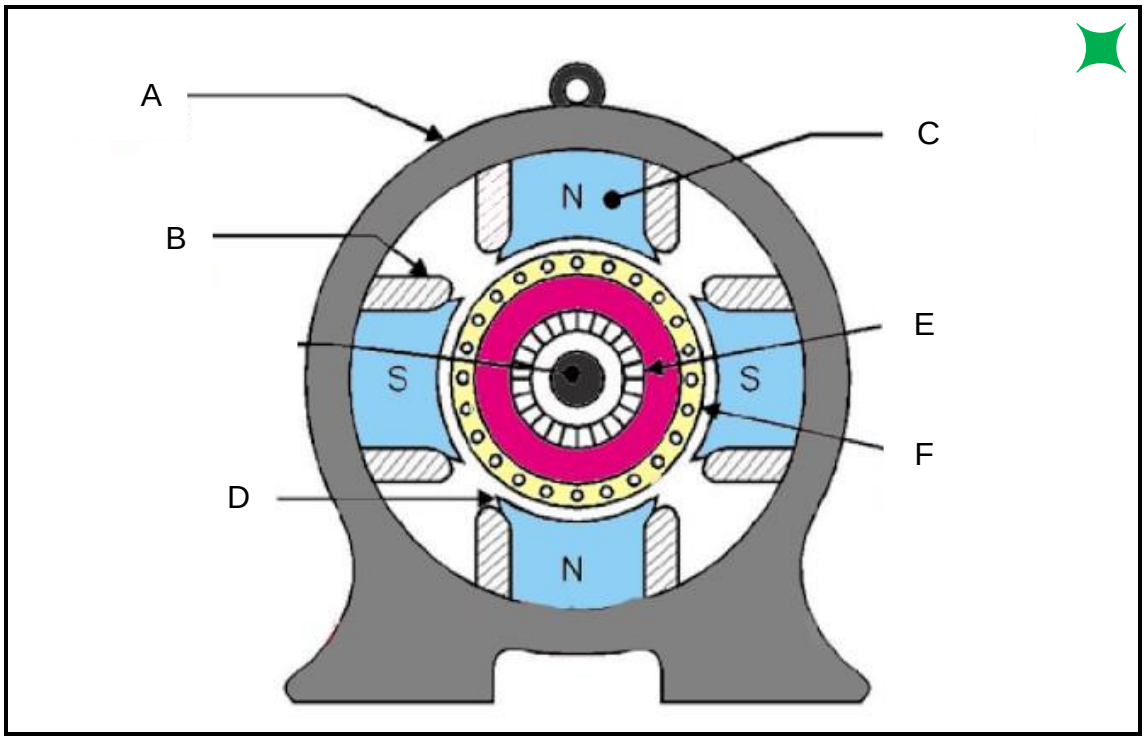

FIGURE 4

Refer to FIGURE 4 above, and answer the following questions:

5.3.1 Identify FIGURE 4. (1)

5.3.2 Name the parts labelled A to F in FIGURE 4. Write only the answer next to the letter (A–F) in the ANSWER BOOK. (6)

5.4 A shunt generator delivers 150 A at 220 V. It has an armature resistance of 0,01 Ω and a shunt field resistance of 50 Ω.

Calculate the generated EMF. (5)

5.5 The following data is applicable to a DC motor:

- Supply voltage = 100 V
- Armature current = 2 A
- Generated EMF = 70 V

Calculate the armature resistance. (3)

[20]

TOTAL: 100

Copyright reserved

FORMULA SHEET

1. $\boldsymbol{Cos\phi = \frac{R}{Z}}$

2. $\boldsymbol{P = V\ I\ Cos\phi}$

3. $Q = V\ I\ Sin\phi$

4. $\boldsymbol{S = V\ I}$

5. $V_1 = \left(\frac{R_1}{R_t}\right) V_T$

6. $\boldsymbol{I_1 = \left(\frac{R_2}{R_1 + R_2}\right) I_T}$

7. $R_T = R_1 + R_2 + R_3 + \cdots + R_n$

8. $\frac{1}{R_T} = \frac{1}{R_1} + \frac{1}{R_2} + \frac{1}{R_3} + \cdots + \frac{1}{R_n}$

9. $\frac{V_1}{V_2} = \frac{N_1}{N_2} = \frac{I_2}{I_1}$

10. $V_L = \sqrt{3}\, V\ p\ h$

11. $\boldsymbol{E = V - I_a\ R_a}$

12. $\boldsymbol{f = \frac{Np}{60}}$

13. $S = \frac{N_s - N_r}{N_s}$

14. $\boldsymbol{R_{sh} = \frac{I_m\ R_m}{I_{sh}}}$

15. $\tan\boldsymbol{\phi} = \sqrt{3}\left(\frac{\boldsymbol{W_1 - W_2}}{\boldsymbol{W_1 + W_2}}\right)$

16. $E = V + I\ r$

17. $\boldsymbol{V = I\ R}$

18. $R = \frac{p\ l}{A}$

19. $\boldsymbol{R_t = R_0(1 + \alpha t)}$

20. $R_t = R_\theta[1 + \propto_\theta (t - \theta)]$

21. $P = V\ I$

22. $E = I^2\ R\ t$

23. $\boldsymbol{\eta = \frac{P_0}{P_{in}} \times 100}$

24. $\boldsymbol{X_L = 2\pi\ f\ L}$

25. $X_C = \frac{1}{2\pi\ f\ C}$

26. $\boldsymbol{Z = \sqrt{R^2 + (X_L - X_C)^2}}$

27. $Mmf = N\ I$

28. $H = \frac{Mmf}{l}$

Copyright reserved

29. $R_{se} = \frac{V_t}{I_t} - R_m$

30. $F = B\ I\ l$

31. $E = -L\frac{di}{dt}$

32. $A = \frac{\pi\ d^2}{4}$

33. $E = \frac{1}{2}\ C\ V^2$

34. $Q = C\ V$

35. $F = 2\times10^{-7} \times \frac{I_1\ I_2}{d}$

36. $I = \frac{Emf}{R_T + r_T}$

37. $L = N\frac{\Delta\ \phi}{\Delta\ I}$

38. $E = V + R_a I_a$

39. $P = \sqrt{3}\ V_L I_L\ cos\theta$

40. $S = \sqrt{3}\ V_L I_L$

41. $B = \frac{\Phi}{A}$

42. $E = B\ l\ v$

43. $E = -N\ \frac{d\emptyset}{dt}$

44. $E = \frac{V}{d}$

45. $E = \frac{1}{2}LI^2$

46. $Q = It$

47. $C_T = C_1 + C_2 + C_3 + \cdots + C_n$

48. $\frac{1}{C_T} = \frac{1}{C_1} + \frac{1}{C_2} + \frac{1}{C_3} + \cdots + \frac{1}{C_n}$

49. $L_T = L_1 + L_2 + L_3 + \cdots + L_n$

50. $\frac{1}{L_T} = \frac{1}{L_1} + \frac{1}{L_2} + \frac{1}{L_3} + \cdots + \frac{1}{L_n}$

51. $Q = \sqrt{3}\ V_L I_L\ sin\theta$

52. $Pf = cos\theta$

Copyright reserved