higher education & training

Department:
Higher Education and Training
REPUBLIC OF SOUTH AFRICA

NATIONAL CERTIFICATE (VOCATIONAL)

PHYSICAL SCIENCE

(Second paper)
NQF LEVEL 4

(10021004)

29 November 2024 (X-paper)
09:00–12:00

Non-programmable scientific calculators may be used.

This question paper consists of 9 pages, 3 information sheets and 1 periodic table.

565Q2S2429

Copyright reserved

DEPARTMENT OF HIGHER EDUCATION AND TRAINING
REPUBLIC OF SOUTH AFRICA

NATIONAL CERTIFICATE (VOCATIONAL)
PHYSICAL SCIENCE
NQF LEVEL 4
(Second paper)
TIME: 3 HOURS
MARKS: 150

INSTRUCTIONS AND INFORMATION

1. Write your EXAMINATION NUMBER and CENTRE NUMBER in the appropriate in the appropriate spaces on the ANSWER BOOK.
2. The question paper consists of 11 questions. Answer ALL the questions in the ANSWER BOOK.
3. Start each question on a new page in the ANSWER BOOK.
4. Number the answers correctly according to the numbering system used in this question paper.
5. You may use non-programmable calculator.
6. You are advised to use the attached Data Sheets, Periodic Table and other Information Sheets where applicable.
7. Show all formulae and substitutions in all the calculations.
8. Round off the FINAL numerical answers to a minimum of THREE decimal places where applicable.
9. Give brief motivations, discussions, et cetera where required.
10. Use only a black or blue pen.
11. Write neatly and legibly.

Copyright reserved

SECTION A

QUESTION 1

Give a term for each of the following descriptions. Write only the answer next to the question number (1.1–1.5) in the ANSWER BOOK.

1.1 SI unit for nuclear transformations per second

1.2 Stage in a titration when an indicator changes colour

1.3 Responsible for the low vapour pressure of carboxylic acids

1.4 Indicates the acidity or alkalinity of a solution

1.5 Solution with equal concentrations of hydroxide and hydronium ions

(5 × 1) **[5]**

QUESTION 2

Choose an item from COLUMN B that matches a description in COLUMN A. Write only the letter (A–L) next to the question number (2.1–2.5) in the ANSWER BOOK.

COLUMN A		COLUMN B	
2.1	Radiation hazard for the entire body	A	acid
2.2	Either a molecule or an ion capable of donating a proton	B	sulphuric acid
2.3	Secondary cell	C	dry cell
2.4	A colourless liquid with yellow or red fumes with an acrid smell	D	positive
2.5	Organic molecules consisting of carbon and hydrogen	E	gamma rays
		F	radioactive
		G	beta particle
		H	catalyst
		I	rechargeable battery
		J	hydrocarbons
		K	negative
		L	nitric acid

(5 × 1) **[5]**

Copyright reserved

QUESTION 3

Indicate whether the following statements are TRUE or FALSE by writing only 'True' or 'False' next to the question number (3.1–3.5) in the ANSWER BOOK. Correct the statement if 'False'.

3.1 Alpha particles can be stopped by a layer of clothing.

3.2 The burning of coal is linked with acid rain and neurological problems.

3.3 Hydrocarbons are organic molecules consisting entirely of hydrogen and oxygen.

3.4 The PH value of NaOH is 13.

3.5 Vinegar is also called propanoic acid.

(5 × 2) **[10]**

QUESTION 4

Various options are given as possible answers to the following questions. Choose the answer and write only the letter (A–D) next to the question number (4.1–4.5) in the ANSWER BOOK.

4.1 … has a low viscosity.

A Motor oil
B Ethanol
C Honey
D Water

4.2 The oxidation number of chromium in potassium dichromate is …

A -4
B +7
C -2
D +8

4.3 A hydrocarbon is an organic … that consists of hydrogen and carbon only.

A proton
B element
C atom
D compound

4.4 A/An … cell uses electrical energy to produce a non-spontaneous redox reaction.

A voltaic
B galvanic
C fuel cell
D electrolytic

4.5 A strong acid is a strong electrolyte because …

A its PH is less than 7.
B it ionises completely.
C it produces less hydrogen ions.
D it reacts with metals to produce hydrogen gas.

(5 × 3) **[15]**

TOTAL SECTION A: 35

SECTION B

QUESTION 5



This Photo by Unknown Author is licensed under CC BY

5.1 Give THREE reasons why different boiling points are used to separate the individual hydrocarbons from crude oil. (3 × 2) (6)

5.2 Which ONE of the hydrocarbons has the highest boiling point, ethane or butane? (2)

5.3 Name the hydrocarbon that will be removed first, ethane or butane? Also give a reason for the answer. (2 × 2) (4)

5.4 Draw the structure formula of 2-pentene. (4)

5.5 Name TWO organic compounds used for methanol and ethanoic acid. (2 × 2) (4)

5.6 Define the following:

5.6.1 Boiling point

5.6.2 Molecular formula

5.6.3 Saturated compounds

(3 × 2) (6)
[26]

QUESTION 6

6.1 Complete the following table by writing only the answers next to the question numbers (6.1.1–6.1.3) in the ANSWER BOOK.

NAME	CONDENSED STRUCTURED	MOLAR MASS ($gmol^-$)	BOILING POINT
Methanol	6.1.1 …	32	65
6.1.2 …	CH_3CH_2OH	46	78.5
Dimethyl ether	6.1.3 …	46	-23

(3 × 2) (6)

6.2 Which ONE of methanol or CH_3CH_2OH has weaker intermolecular forces? (2)

6.3 Give TWO reasons for your answer to QUESTION 6.2. (2 × 2) (4)

6.4 TVET college students investigated the effect of chain length on the boiling point of the following organic acids. They heated each sample of 15 cm^3 of acid.

	CARBOXYLIC ACIDS	BOILING POINT (º C)
A	Methanolic acid	101
B	Ethanoic acid	118
C	Propanoic acid	141
D	Butanoic acid	164

6.4.1 Write down an investigative question for this experiment. (2)

6.4.2 Name the independent variable. (1)

6.4.3 Name the controlled variable. (1)
[16]

QUESTION 7

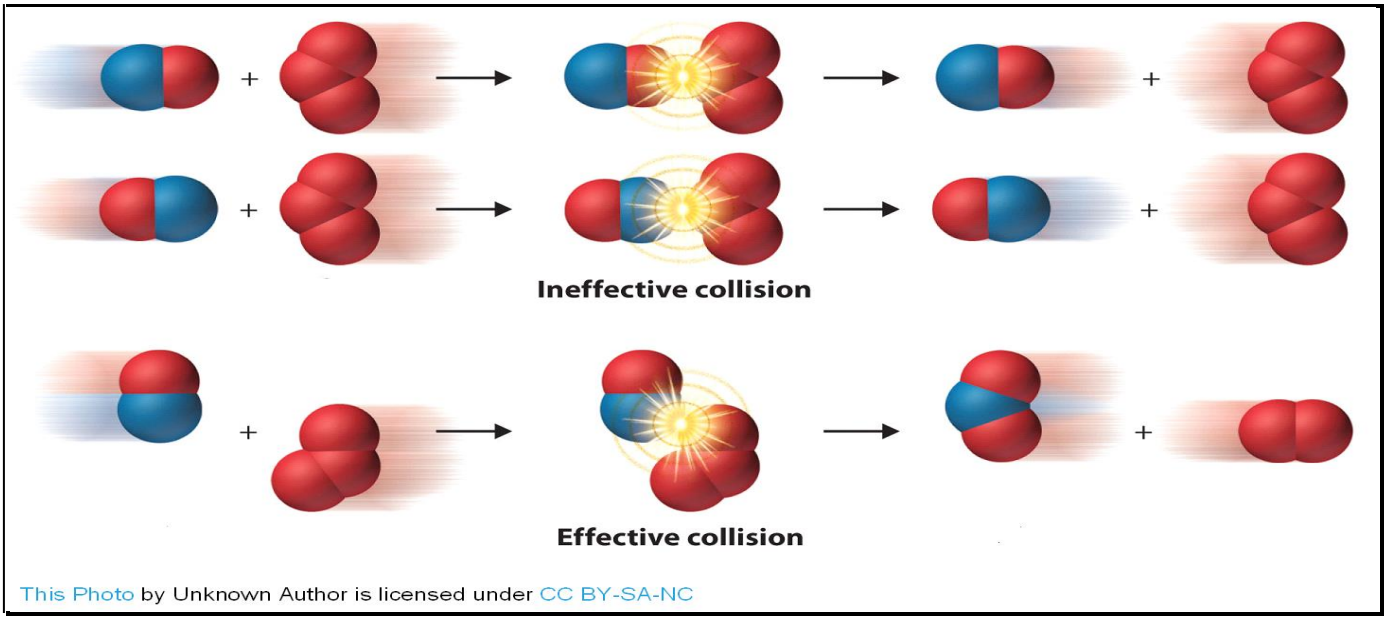

This Photo by Unknown Author is licensed under CC BY-SA-NC

7.1 State FIVE factors that affect the rate of the reaction. (5)

7.2 How does a catalyst affect the rate of reaction? (2)

7.3 Give TWO reasons why the pressure should be high during the production of ammonia. (2 × 2) (4)

7.4 In the first stage of the Ostwald process, ammonia reacts with oxygen to form nitrogen oxide (NO) and water in a chamber containing platinum gauze.

7.4.1 Write the balanced chemical equation for this reaction. (4)

7.4.2 What is the function of the platinum gauze? (2)

[17]

QUESTION 8: ORGANIC REACTIONS

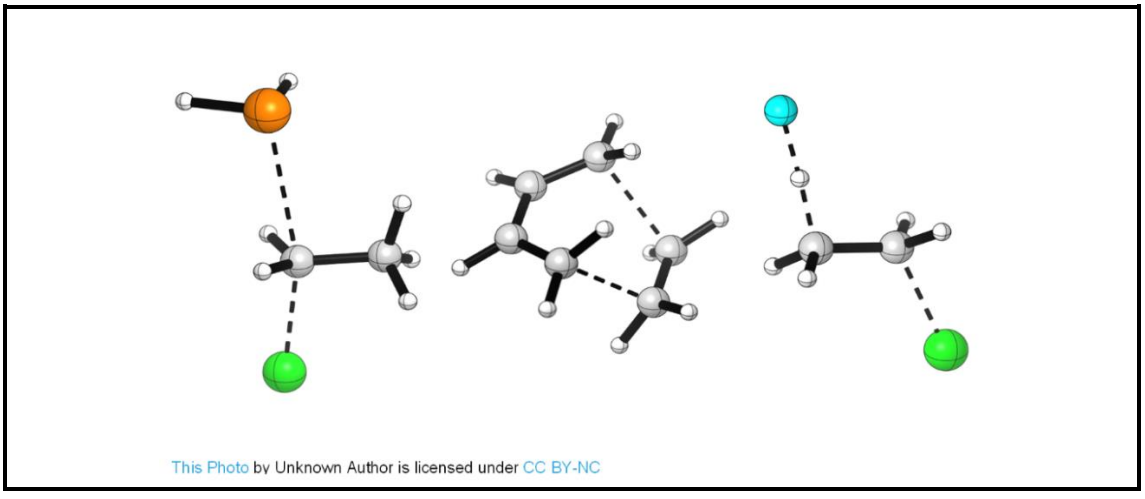

This Photo by Unknown Author is licensed under CC BY-NC

8.1 Define the *oxidation of an atom.* (2)

8.2 What kind of ions are formed when metal is oxidised? (2)

8.3 The following half reactions are relevant to a rechargeable nickel cadmium cell:

$Cd(OH)_2(s) + 2e^-$

8.3.1 Which electrode is the anode when the cell is producing electricity? (2)

8.3.2 Write down the equation of the oxidation half-reaction of this cell when the cell is producing electricity. (1)

8.3.3 Write a balanced equation for the reaction taking place when the cell is producing electricity. (3 × 2) (6)

8.3.4 Calculate the EMF of the cell. (4)

8.3.5 In which direction do the electrons flow in the external circuit when the cell is being recharged? (2)

[19]

QUESTION 9

9.1 Name FOUR radiation detector instruments. (4)

9.2 Define the term *radioactive.* (2)

9.3 Name FOUR uses of nuclear radiation. (4)

9.4 Name THREE sources of renewable energy that are pollution-free. (3)

[13]

QUESTION 10

The diagrams below show two electrochemical cells in which carbon electrodes are used. In cell A a concentrated $CuC\ell_2(aq)$ solution is used and in cell B a liquid $A\ell_2O_3(\ell)$ is used.

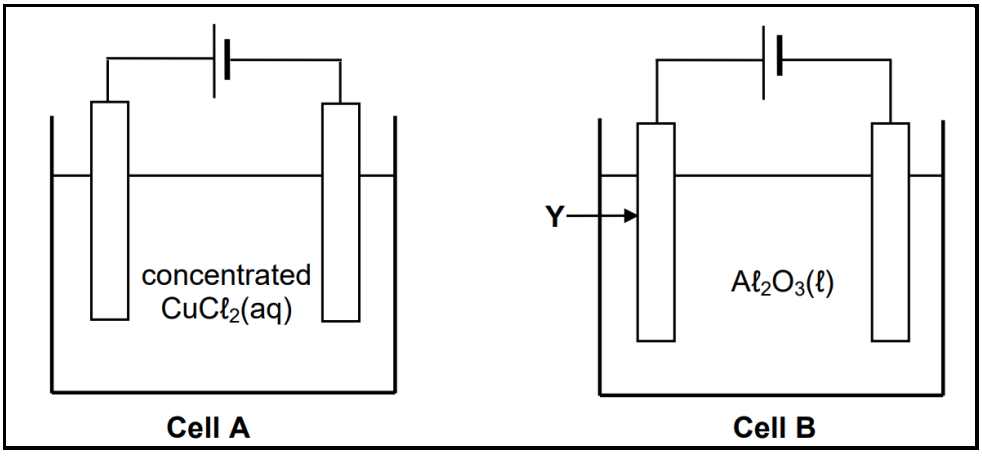

10.1 Define the following terms in your own words:

10.1.1 Anode

10.1.2 Cathode

: (2 × 2) (4)

10.2 What type of electrochemical cell is shown in the diagrams above? Explain your answer. (2 × 2) (4)

10.3 Name the chemicals used in cell A and cell B. (2)

10.4 What will happen to the mass of electrode Y? (2)
[12]

QUESTION 11

The JoJo tank below has a radius of 6 m and a height of 10 m. The tank is filled to the top with a liquid with a density of 1,2 kg.m^3. Assume that the pressure is 100 kPa.



11.1 Name TWO applications of Pascal's principle. (2)

11.2 Define *hydrostatic pressure.* (2)

11.3 Name the principle on which a hydraulic press functions. (2)

11.4 Calculate the net pressure at the bottom of the tank. (6)
[12]

TOTAL SECTION B: 115
GRAND TOTAL: 150

Copyright reserved

DATA FOR PHYSICAL SCIENCES GRADE 12
PAPER 2 (CHEMISTRY)

GEGEWENS VIR FISIESE WETENSKAPPE GRAAD 12
VRAESTEL 2 (CHEMIE)

TABLE 1: PHYSICAL CONSTANTS / TABEL 1: FISIESE KONSTANTES

NAME/NAAM	SYMBOL/SIMBOOL	VALUE/WAARDE
Standard pressure *Standaarddruk*	p^{ε}	$1{,}013 \times 10^5$ Pa
Molar gas volume at STP *Molêre gasvolume by STD*	V_m	22,4 $dm^3 \cdot mol^{-1}$
Standard temperature *Standaardtemperatuur*	T^{ε}	273 K
Charge on electron *Lading op elektron*	e	$-1{,}6 \times 10^{-19}$ C
Avogadro's constant *Avogadro se konstante*	N_A	$6{,}02 \times 10^{23}$ mol^{-1}

TABLE 2: FORMULAE / TABEL 2: FORMULES

$n = \frac{m}{M}$	$n = \frac{N}{N_A}$
$c = \frac{n}{V}$ or / of $c = \frac{m}{MV}$	$n = \frac{V}{V_m}$
$\frac{c_a v_a}{c_b v_b} = \frac{n_a}{n_b}$	$pH = -\log[H_3O^+]$
$K_w = [H_3O^+][OH^-] = 1 \times 10^{-14}$ at/*by* 298 K	
$E^{\theta}_{cell} = E^{\theta}_{cathode} - E^{\theta}_{anode}$ / $E^{\theta}_{sel} = E^{\theta}_{katode} - E^{\theta}_{anode}$ or/*of* $E^{\theta}_{cell} = E^{\theta}_{reduction} - E^{\theta}_{oxidation}$ / $E^{\theta}_{sel} = E^{\theta}_{reduksie} - E^{\theta}_{oksidasie}$ or/*of* $E^{\theta}_{cell} = E^{\theta}_{oxidising\ agent} - E^{\theta}_{reducing\ agent}$ / $E^{\theta}_{sel} = E^{\theta}_{oksideermiddel} - E^{\theta}_{reduseermiddel}$	

Copyright reserved

TABLE 3: THE PERIODIC TABLE OF ELEMENTS/*TABEL 3: DIE PERIODIEKE TABEL VAN ELEMENTE*

1 (I)	2 (II)	3	4	5	6	7	8	9	10	11	12	13 (III)	14 (IV)	15 (V)	16 (VI)	17 (VII)	18 (VIII)
2,1 H 1																	2 He 4
1,0 Li 7	1,5 Be 9											2,0 B 11	2,5 C 12	3,0 N 14	3,5 O 16	4,0 F 19	10 Ne 20
0,9 Na 23	1,2 Mg 24											1,5 Aℓ 27	1,8 Si 28	2,1 P 31	2,5 S 32	3,0 Cℓ 35,5	18 Ar 40
0,8 K 39	1,0 Ca 40	1,3 Sc 45	1,5 Ti 48	1,6 V 51	1,6 Cr 52	1,5 Mn 55	1,8 Fe 56	1,8 Co 59	1,8 Ni 59	1,9 Cu 63,5	1,6 Zn 65	1,6 Ga 70	1,8 Ge 73	2,0 As 75	2,4 Se 79	2,8 Br 80	36 Kr 84
0,8 Rb 86	1,0 Sr 88	1,2 Y 89	1,4 Zr 91	Nb 92	1,8 Mo 96	1,9 Tc	2,2 Ru 101	2,2 Rh 103	2,2 Pd 106	1,9 Ag 108	1,7 Cd 112	1,7 In 115	1,8 Sn 119	1,9 Sb 122	2,1 Te 128	2,5 I 127	54 Xe 131
0,7 Cs 133	0,9 Ba 137	La 139	1,6 Hf 179	Ta 181	W 184	Re 186	Os 190	Ir 192	Pt 195	Au 197	Hg 201	1,8 Tℓ 204	1,8 Pb 207	1,9 Bi 209	2,0 Po	2,5 At	Rn
0,7 Fr	0,9 Ra 226	Ac															

58 Ce 140	59 Pr 141	60 Nd 144	61 Pm	62 Sm 150	63 Eu 152	64 Gd 157	65 Tb 159	66 Dy 163	67 Ho 165	68 Er 167	69 Tm 169	70 Yb 173	71 Lu 175
90 Th 232	91 Pa	92 U 238	93 Np	94 Pu	95 Am	96 Cm	97 Bk	98 Cf	99 Es	100 Fm	101 Md	102 No	103 Lr

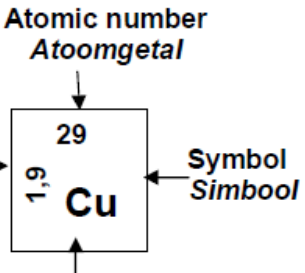

Copyright reserved

TABLE 4A: STANDARD REDUCTION POTENTIALS
TABEL 4A: STANDAARD REDUKSIEPOTENSIALE

Half-reactions/*Halfreaksies*			(V)
$F_2(g) + 2e^-$	$\rightleftharpoons$	$2F^-$	+ 2,87
$Co^{3+} + e^-$	$\rightleftharpoons$	Co^{2+}	+ 1,81
$H_2O_2 + 2H^+ + 2e^-$	$\rightleftharpoons$	$2H_2O$	+1,77
$MnO_4^- + 8H^+ + 5e^-$	$\rightleftharpoons$	$Mn^{2+} + 4H_2O$	+ 1,51
$C\ell_2(g) + 2e^-$	$\rightleftharpoons$	$2C\ell^-$	+ 1,36
$Cr_2O_7^{2-} + 14H^+ + 6e^-$	$\rightleftharpoons$	$2Cr^{3+} + 7H_2O$	+ 1,33
$O_2(g) + 4H^+ + 4e^-$	$\rightleftharpoons$	$2H_2O$	+ 1,23
$MnO_2 + 4H^+ + 2e^-$	$\rightleftharpoons$	$Mn^{2+} + 2H_2O$	+ 1,23
$Pt^{2+} + 2e^-$	$\rightleftharpoons$	Pt	+ 1,20
$Br_2(\ell) + 2e^-$	$\rightleftharpoons$	$2Br^-$	+ 1,07
$NO_3^- + 4H^+ + 3e^-$	$\rightleftharpoons$	$NO(g) + 2H_2O$	+ 0,96
$Hg^{2+} + 2e^-$	$\rightleftharpoons$	$Hg(\ell)$	+ 0,85
$Ag^+ + e^-$	$\rightleftharpoons$	Ag	+ 0,80
$NO_3^- + 2H^+ + e^-$	$\rightleftharpoons$	$NO_2(g) + H_2O$	+ 0,80
$Fe^{3+} + e^-$	$\rightleftharpoons$	Fe^{2+}	+ 0,77
$O_2(g) + 2H^+ + 2e^-$	$\rightleftharpoons$	H_2O_2	+ 0,68
$I_2 + 2e^-$	$\rightleftharpoons$	$2I^-$	+ 0,54
$Cu^+ + e^-$	$\rightleftharpoons$	Cu	+ 0,52
$SO_2 + 4H^+ + 4e^-$	$\rightleftharpoons$	$S + 2H_2O$	+ 0,45
$2H_2O + O_2 + 4e^-$	$\rightleftharpoons$	$4OH^-$	+ 0,40
$Cu^{2+} + 2e^-$	$\rightleftharpoons$	Cu	+ 0,34
$SO_4^{2-} + 4H^+ + 2e^-$	$\rightleftharpoons$	$SO_2(g) + 2H_2O$	+ 0,17
$Cu^{2+} + e^-$	$\rightleftharpoons$	Cu^+	+ 0,16
$Sn^{4+} + 2e^-$	$\rightleftharpoons$	Sn^{2+}	+ 0,15
$S + 2H^+ + 2e^-$	$\rightleftharpoons$	$H_2S(g)$	+ 0,14
$2H^+ + 2e^-$	$\rightleftharpoons$	**$H_2(g)$**	**0,00**
$Fe^{3+} + 3e^-$	$\rightleftharpoons$	Fe	– 0,06
$Pb^{2+} + 2e^-$	$\rightleftharpoons$	Pb	– 0,13
$Sn^{2+} + 2e^-$	$\rightleftharpoons$	Sn	– 0,14
$Ni^{2+} + 2e^-$	$\rightleftharpoons$	Ni	– 0,27
$Co^{2+} + 2e^-$	$\rightleftharpoons$	Co	– 0,28
$Cd^{2+} + 2e^-$	$\rightleftharpoons$	Cd	– 0,40
$Cr^{3+} + e^-$	$\rightleftharpoons$	Cr^{2+}	– 0,41
$Fe^{2+} + 2e^-$	$\rightleftharpoons$	Fe	– 0,44
$Cr^{3+} + 3e^-$	$\rightleftharpoons$	Cr	– 0,74
$Zn^{2+} + 2e^-$	$\rightleftharpoons$	Zn	– 0,76
$2H_2O + 2e^-$	$\rightleftharpoons$	$H_2(g) + 2OH^-$	– 0,83
$Cr^{2+} + 2e^-$	$\rightleftharpoons$	Cr	– 0,91
$Mn^{2+} + 2e^-$	$\rightleftharpoons$	Mn	– 1,18
$A\ell^{3+} + 3e^-$	$\rightleftharpoons$	$A\ell$	– 1,66
$Mg^{2+} + 2e^-$	$\rightleftharpoons$	Mg	– 2,36
$Na^+ + e^-$	$\rightleftharpoons$	Na	– 2,71
$Ca^{2+} + 2e^-$	$\rightleftharpoons$	Ca	– 2,87
$Sr^{2+} + 2e^-$	$\rightleftharpoons$	Sr	– 2,89
$Ba^{2+} + 2e^-$	$\rightleftharpoons$	Ba	– 2,90
$Cs^+ + e^-$	$\rightleftharpoons$	Cs	- 2,92
$K^+ + e^-$	$\rightleftharpoons$	K	– 2,93
$Li^+ + e^-$	$\rightleftharpoons$	Li	– 3,05

Increasing oxidising ability/*Toenemende oksiderende vermoë*

Increasing reducing ability/*Toenemende reduserende vermoë*

Copyright reserved

TABLE 4B: STANDARD REDUCTION POTENTIALS
TABEL 4B: STANDAARD REDUKSIEPOTENSIALE

Increasing oxidising ability/*Toenemende oksiderende vermoë* ↓

↑ Increasing redusing ability/*Toenemende reduserende vermoë*

Half-reactions/*Halfreaksies*	(V)
$Li^+ + e^- \rightleftharpoons Li$	− 3,05
$K^+ + e^- \rightleftharpoons K$	− 2,93
$Cs^+ + e^- \rightleftharpoons Cs$	− 2,92
$Ba^{2+} + 2e^- \rightleftharpoons Ba$	− 2,90
$Sr^{2+} + 2e^- \rightleftharpoons Sr$	− 2,89
$Ca^{2+} + 2e^- \rightleftharpoons Ca$	− 2,87
$Na^+ + e^- \rightleftharpoons Na$	− 2,71
$Mg^{2+} + 2e^- \rightleftharpoons Mg$	− 2,36
$A\ell^{3+} + 3e^- \rightleftharpoons A\ell$	− 1,66
$Mn^{2+} + 2e^- \rightleftharpoons Mn$	− 1,18
$Cr^{2+} + 2e^- \rightleftharpoons Cr$	− 0,91
$2H_2O + 2e^- \rightleftharpoons H_2(g) + 2OH^-$	− 0,83
$Zn^{2+} + 2e^- \rightleftharpoons Zn$	− 0,76
$Cr^{3+} + 3e^- \rightleftharpoons Cr$	− 0,74
$Fe^{2+} + 2e^- \rightleftharpoons Fe$	− 0,44
$Cr^{3+} + e^- \rightleftharpoons Cr^{2+}$	− 0,41
$Cd^{2+} + 2e^- \rightleftharpoons Cd$	− 0,40
$Co^{2+} + 2e^- \rightleftharpoons Co$	− 0,28
$Ni^{2+} + 2e^- \rightleftharpoons Ni$	− 0,27
$Sn^{2+} + 2e^- \rightleftharpoons Sn$	− 0,14
$Pb^{2+} + 2e^- \rightleftharpoons Pb$	− 0,13
$Fe^{3+} + 3e^- \rightleftharpoons Fe$	− 0,06
$2H^+ + 2e^- \rightleftharpoons H_2(g)$	**0,00**
$S + 2H^+ + 2e^- \rightleftharpoons H_2S(g)$	+ 0,14
$Sn^{4+} + 2e^- \rightleftharpoons Sn^{2+}$	+ 0,15
$Cu^{2+} + e^- \rightleftharpoons Cu^+$	+ 0,16
$SO_4^{2-} + 4H^+ + 2e^- \rightleftharpoons SO_2(g) + 2H_2O$	+ 0,17
$Cu^{2+} + 2e^- \rightleftharpoons Cu$	+ 0,34
$2H_2O + O_2 + 4e^- \rightleftharpoons 4OH^-$	+ 0,40
$SO_2 + 4H^+ + 4e^- \rightleftharpoons S + 2H_2O$	+ 0,45
$Cu^+ + e^- \rightleftharpoons Cu$	+ 0,52
$I_2 + 2e^- \rightleftharpoons 2I^-$	+ 0,54
$O_2(g) + 2H^+ + 2e^- \rightleftharpoons H_2O_2$	+ 0,68
$Fe^{3+} + e^- \rightleftharpoons Fe^{2+}$	+ 0,77
$NO_3^- + 2H^+ + e^- \rightleftharpoons NO_2(g) + H_2O$	+ 0,80
$Ag^+ + e^- \rightleftharpoons Ag$	+ 0,80
$Hg^{2+} + 2e^- \rightleftharpoons Hg(\ell)$	+ 0,85
$NO_3^- + 4H^+ + 3e^- \rightleftharpoons NO(g) + 2H_2O$	+ 0,96
$Br_2(\ell) + 2e^- \rightleftharpoons 2Br^-$	+ 1,07
$Pt^{2+} + 2e^- \rightleftharpoons Pt$	+ 1,20
$MnO_2 + 4H^+ + 2e^- \rightleftharpoons Mn^{2+} + 2H_2O$	+ 1,23
$O_2(g) + 4H^+ + 4e^- \rightleftharpoons 2H_2O$	+ 1,23
$Cr_2O_7^{2-} + 14H^+ + 6e^- \rightleftharpoons 2Cr^{3+} + 7H_2O$	+ 1,33
$C\ell_2(g) + 2e^- \rightleftharpoons 2C\ell^-$	+ 1,36
$MnO_4^- + 8H^+ + 5e^- \rightleftharpoons Mn^{2+} + 4H_2O$	+ 1,51
$H_2O_2 + 2H^+ + 2e^- \rightleftharpoons 2H_2O$	+1,77
$Co^{3+} + e^- \rightleftharpoons Co^{2+}$	+ 1,81
$F_2(g) + 2e^- \rightleftharpoons 2F^-$	+ 2,87

Copyright reserved