higher education & training

Department:
Higher Education and Training
REPUBLIC OF SOUTH AFRICA

NATIONAL CERTIFICATE (VOCATIONAL)

PHYSICAL SCIENCE

(First paper)

NQF LEVEL 4

(10021004)

28 November 2024 (X-paper)
09:00–12:00

Non-programmable calculators and appropriate mathematical instruments may be used.

This question paper consists of 13 pages and an information sheet of 3 pages.

557Q1N2428

Copyright reserved

DEPARTMENT OF HIGHER EDUCATION AND TRAINING
REPUBLIC OF SOUTH AFRICA

NATIONAL CERTIFICATE (VOCATIONAL)
PHYSICAL SCIENCE
NQF LEVEL 4
(First paper)
TIME: 3 HOURS
MARKS: 150

INSTRUCTIONS AND INFORMATION

1. Write your EXAMINATION NUMBER and CENTRE NUMBER in the appropriate spaces on the ANSWER BOOK.
2. The question paper consists of 13 questions. Answer ALL the questions in the ANSWER BOOK.
3. Start EACH question on a NEW page in the ANSWER BOOK.
4. Number the answers correctly according to the numbering system used in this question paper.
5. You may use a non-programmable calculator.
6. You may use appropriate mathematical instruments.
7. Show ALL formulae and substitutions in ALL calculations.
8. Round off your FINAL numerical answers to a minimum of TWO decimal places.
9. Give brief motivations, discussions, etc. where required.
10. You are advised to use the attached DATA SHEETS.
11. Write neatly and legibly.

Copyright reserved

SECTION A

QUESTION 1

Give ONE term for each of the following descriptions by writing it next to the question number (1.1–1.5) in the ANSWER BOOK.

1.1 Condition where the positive terminal of a battery is connected to its n-side and the negative terminal of the battery is connected to the p-side of the diode

1.2 Visible light of a narrow band of wavelength

1.3 Loud noise heard when an aircraft passes through the sound barrier

1.4 Turning effect of a force

1.5 Effectiveness of a lever

(5 × 1) **[5]**

QUESTION 2

Choose a term from COLUMN B that matches a description in COLUMN A. Write only the letter (A–J) next to the question number (2.1–2.5) in the ANSWER BOOK.

COLUMN A		COLUMN B	
2.1	Electromagnetic waves with the highest frequency	A	impulse
2.2	Rate of the change in momentum	B	net force
2.3	Minimum quantity of energy required to remove an electron to infinity from the surface of a given solid, usually a metal	C	radio waves
		D	generator
2.4	Electric machine that converts electrical energy to mechanical energy	E	motor
		F	reverse-bias diode
2.5	Formed when the p-type region moves to the negative terminal of the voltage supply	G	forward-bias diode
		H	threshold frequency
		I	gamma rays
		J	work function

(5 × 1) **[5]**

QUESTION 3

Indicate whether the following statements are TRUE or FALSE by writing only 'True' or 'False' next to the question number (3.1–3.5) in the ANSWER BOOK. Correct the statement if it is FALSE.

3.1 In a head-on collision between two masses, the least massive object receives the greatest acceleration.

3.2 A motor is an electrical device that converts electrical energy to mechanical energy.

3.3 A particle representing a quantum of light or other electromagnetic radiation is called a photon.

3.4 Watt (W) is the SI unit for electrical energy.

3.5 During projectile motion, the vertical component of acceleration is zero.

(5 × 2) **[10]**

QUESTION 4

Various options are given as possible answers to the following questions. Choose the answer and write only the letter (A–D) next to the question number (4.1–4.5) in the ANSWER BOOK.

4.1 The siren of an ambulance emits sound waves at a frequency of 250 Hz. The ambulance is moving at a constant speed towards a stationary observer.

Which ONE of the following frequencies is most likely to be heard by the observer?

A 150 Hz
B 250 Hz
C 300 Hz
D 180 Hz

4.2 When light shines on a metal plate in a photocell, electrons are emitted. The graph below shows the relationship between the kinetic energy of the emitted photoelectrons and the frequency of the incoming light.

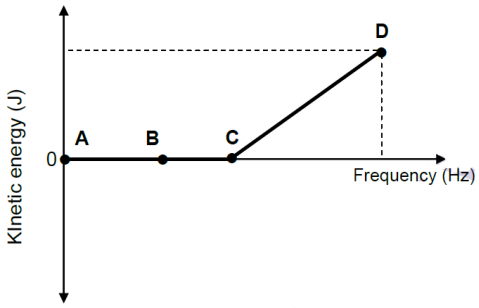

Which ONE of the points (A, B, C or D) on the graph represents the threshold frequency?

A B
B D
C A
D C

4.3 The diagram below shows a parallel plate capacitor with plates separated by distance *d*.

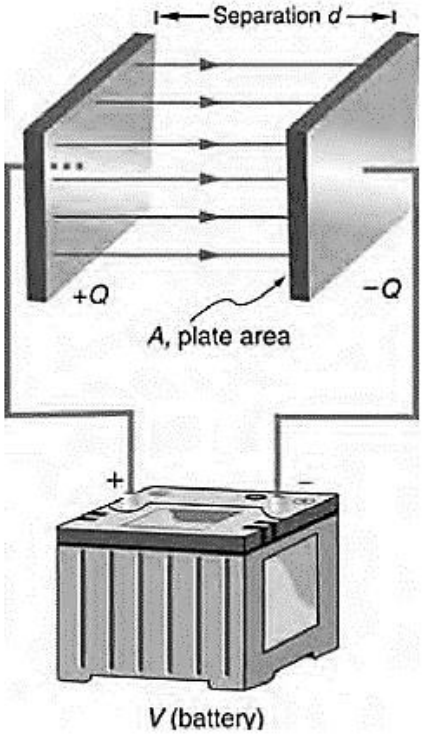

One way of decreasing the capacitance of this capacitor is to …

A increase the area of the plates.
B decrease the area of the plates.
C increase the distance between the plates.
D decrease the constant ε_0 (permittivity of free space).

Copyright reserved

4.4 Doping is the process whereby …

A impurities are added to elements.
B electrons are excited to a higher energy level.
C current is conducted in one direction only.
D electrons are released from an element.

4.5 An ammeter and a voltmeter are connected in a circuit together with three identical bulbs and an open switch S as shown in the circuit diagram below.

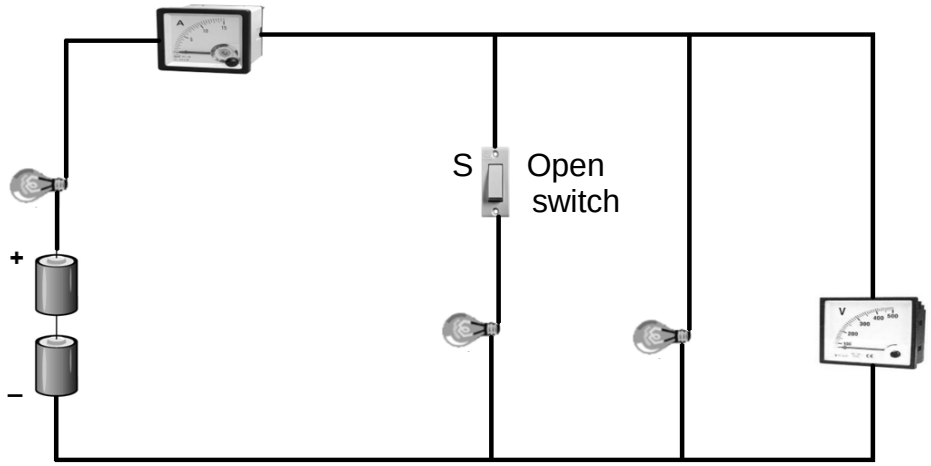

How do the ammeter and the voltmeter readings change if the switch S is now closed?

	AMMETER READING A	VOLTMETER READING V
A	Increases	Increases
B	Increases	Decreases
C	Decreases	Increases
D	Decreases	Decreases

(5 × 3) **[15]**

TOTAL SECTION A: 35

SECTION B

QUESTION 5

5.1 Convert each of the following:

5.1.1 340 nm to m

5.1.2 480 g to kg

5.1.3 240 J/min to W

(3 × 1) (3)

5.2 Give the SI unit for each of the following quantities:

5.2.1 Volume

5.2.2 Amperes

5.2.3 Energy

(3 × 1) (3)

5.3 Identify each of the following hazard signs:

5.3.1



5.3.2



5.3.3



5.3.4



(4 × 1) (4)

[10]

QUESTION 6

6.1 Explain each of the following terms:

6.1.1 Free fall

6.1.2 Gravitational acceleration

(2 × 2) (4)

6.2 A ball with a mass of 250 g is dropped from the roof of a 105 m high building as shown in FIGURE 1.

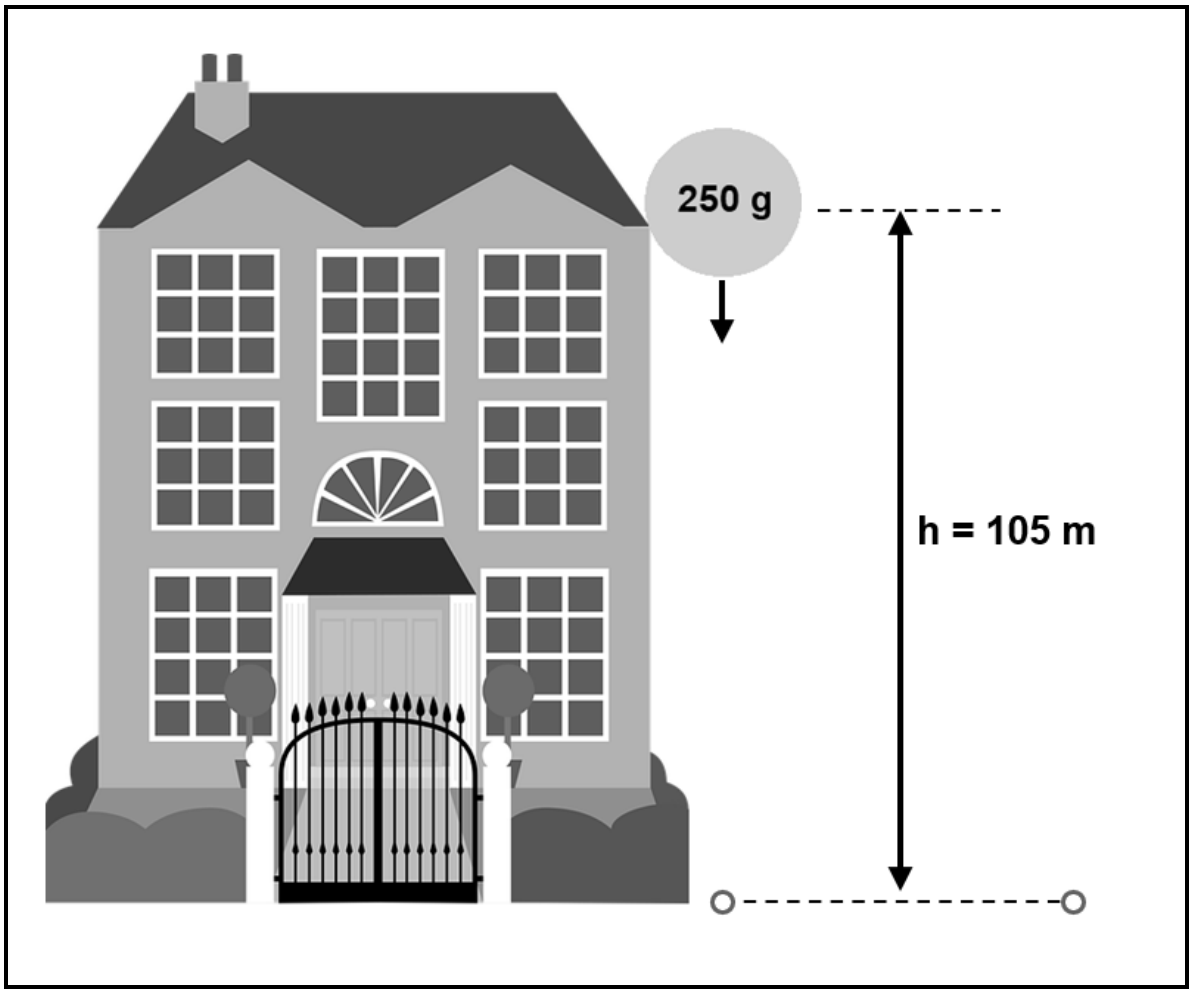

FIGURE 1

Ignore air resistance and calculate:

6.2.1 The velocity of the ball when it hits the ground

6.2.2 The duration of the ball before it hits the ground

(2 × 4) (8)

[12]

QUESTION 7

7.1 State the principle of *conservation of momentum*. (2)

7.2 Explain each of the following terms:

7.2.1 Elastic collision

7.2.2 Inelastic collision

7.2.3 Impulse

7.2.4 Newton's second law

(4 × 2) (8)

7.3 FIGURE 2 shows a trolley A of mass 1,2 kg that moves at 2 m/s and collides in a straight line with the back of trolley B of mass 2,4 kg, which is moving in the same direction at 1,5 m/s. After the collision B continues at 1,75 m/s.

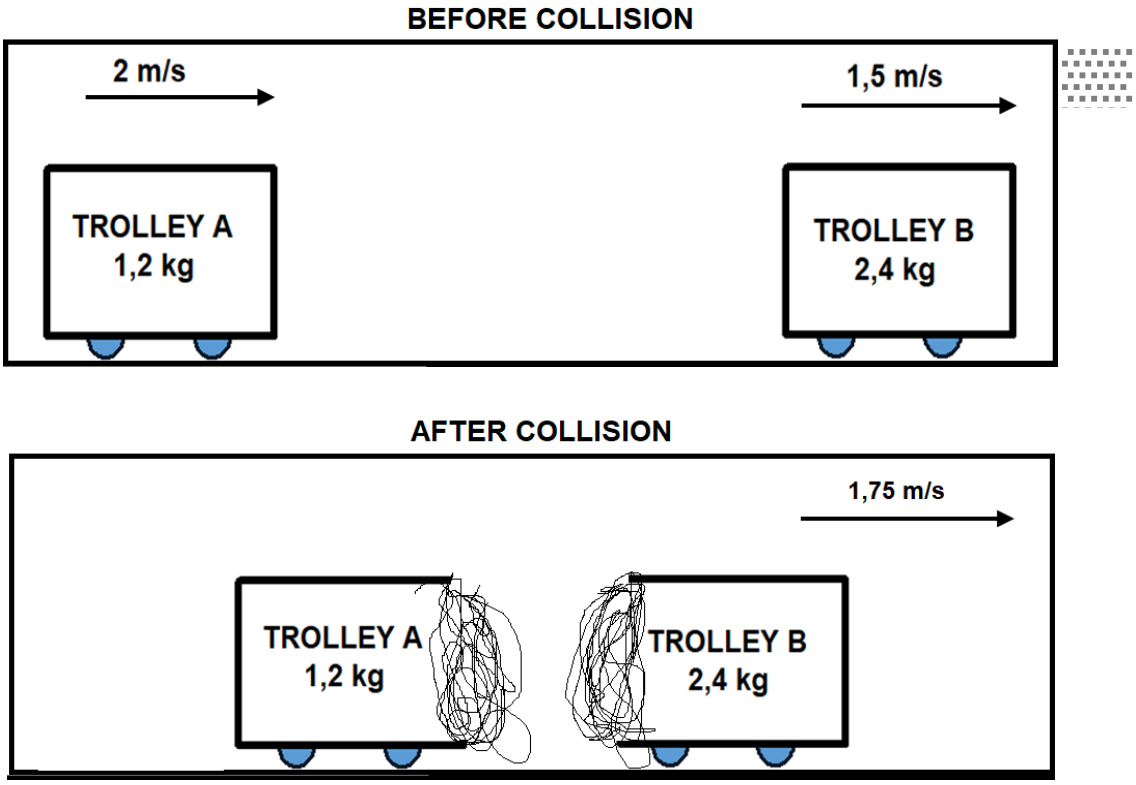

FIGURE 2

Calculate the new velocity of trolley A in magnitude and direction. (4)

[14]

QUESTION 8

8.1 State the *law of conservation of energy*. (2)

8.2 What does it mean to say *work has been done*? (2)

8.3 A small tractor is rated 10 kW. The tractor pulls a log across the ground at a constant speed with a horizontal force of 350 N.

8.3.1 How long will it take the tractor to tow the log over a distance of 850 m? (4)

8.3.2 How would the time calculated in QUESTION 8.3.1 change if a tractor with greater power output was used? Explain the answer. (2)

[10]

QUESTION 9

9.1 A pulley system is used to lift a load of 400 N through a height of 1 m. The pulley system consists of five pulleys: three at the top and two that are connected to the load. The load is lifted by an effort of 120 N.

Calculate:

9.1.1 The mechanical advantage

9.1.2 The velocity ratio

9.1.3 The efficiency of the machine

9.1.4 The work output

(4 × 2) (8)

9.2 Calculate the ideal mechanical advantage of the ramp shown below.

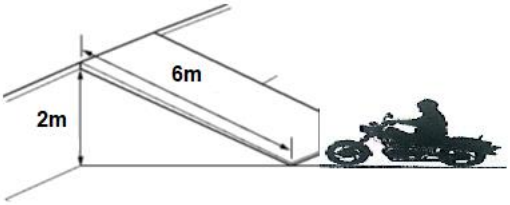

(3)

9.3 The efficiency of a machine that requires 160 J of input energy to do useful work is 25%.

What value should the output energy be? (4)

[15]

QUESTION 10

10.1 What is *resonance*? (2)

10.2 Give ONE application of stress polarisation. (2)

10.3 What is the *Doppler effect*? (2)

10.4 Explain each of the following terms:

10.4.1 Diffraction

10.4.2 Interference

(2 × 2) (4)

10.5 Differentiate between *longitudinal waves* and *transverse waves*. (2)

10.6 Give the THREE unique properties of a laser light. (3)

[15]

QUESTION 11

11.1 Define each of the following terms:

11.1.1 Threshold frequency

11.1.2 Work function

11.1.3 Photoelectric effect

(3 × 2) (6)

11.2 Calculate the energy of a photon:

11.2.1 In light with a frequency of $5,75 \times 10^{14}$ Hz (2)

11.2.2 In light with a wavelength of 568 nm (4)

[12]

QUESTION 12

12.1 A student must replace a blown light bulb in her desk lamp. She bought two light bulbs. The first one is labelled 20 W; 220 V and the second one is labelled 90 W; 220 V.

Calculate the resistance of the 90 W light bulb. (3)

12.2 The student predicts that the 90 W light bulb will burn more brightly than the 20 W bulb. She tests this prediction by connecting the bulbs to the 220 V supply in her home according to the following circuit diagram. Sibahle is surprised to find that the 20 W light bulb burns brightest.

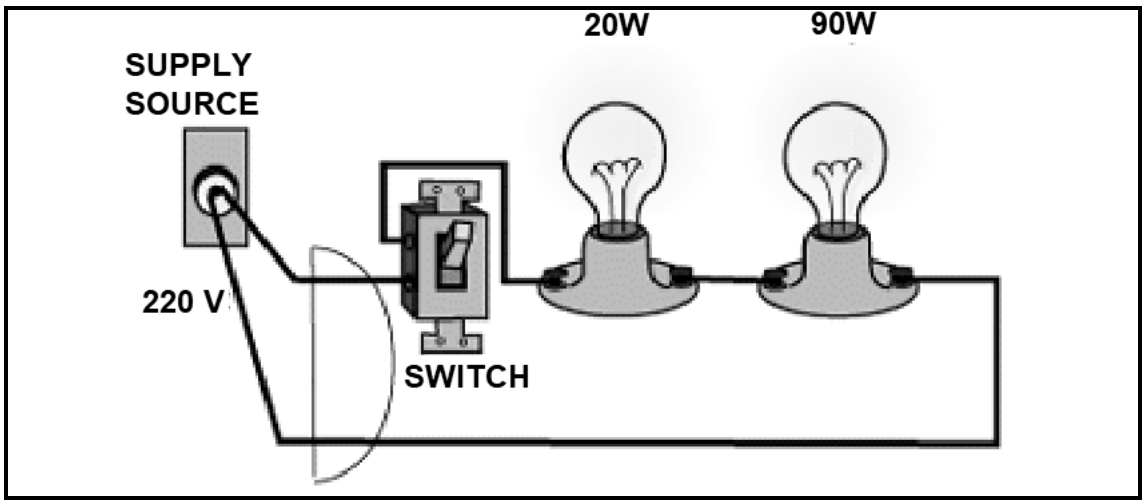

12.2.1 Calculate the total resistance of the circuit in the circuit diagram. (3)

12.2.2 Calculate the actual current flowing through this circuit. (3)

12.2.3 Calculate the potential difference across the 20 W bulb and deduce the potential difference across the 90 W bulb in this circuit. (4)

12.3 Explain why the power output of the 20 W bulb is greater than the power output of the 90 W bulb when the bulbs are connected in this way. (2)

12.4 How should the student connect the light bulbs to function according to their specifications? Explain the answer. (4)
[19]

QUESTION 13

13.1 Name FOUR factors that will influence the ability of capacitors to hold charge. (4)

13.2 Identify each of the following logic gate symbols:

13.2.1 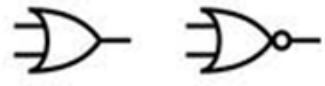

13.2.2 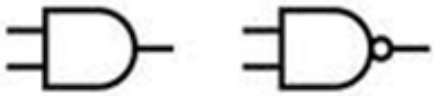

13.2.3 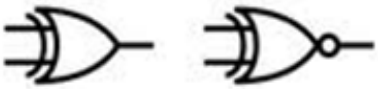

13.2.4 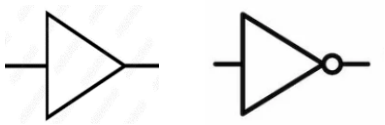

(4 × 1) (4)
[8]

TOTAL SECTION B: 115
GRAND TOTAL: 150

Copyright reserved

INFORMATION SHEET

TABLE 1: PHYSICAL CONSTANTS

NAME	SYMBOL	VALUE
Acceleration due to gravity	g	9,8 $m.s^{-2}$
Speed of light in a vacuum	c	3,0 × 108 $m.s^{-1}$
Planck's constant	h	6,63 × 109 J.s
Coulomb's constant	k	9,0 × 109 $N.m^2.C^{-2}$
Charge of an electron	e	-1,6 × 10^{-19} C
Electron mass	me	9 × 10^{-31} kg
Permittivity of free space	ε_0	8,85 × 10^{-12} $F.m^{-1}$

Copyright reserved

TABLE 2: FORMULAE

MECHANICS

$v = u + at$ **OR** $vf = vi + g\Delta$	$p = mv$ $F_{net}\Delta t = \Delta p$ $F_{net}\Delta t = m(vf - vi)$ $\sum pi = \sum pf$ $F_{net} = \frac{\Delta p}{\Delta t}$
$v^2 = u^2 + 2as$ **OR** $Vf2 = vi2 + 2g\Delta y$ **OR** $Vf2 = vi2 + 2a\Delta x$l	$\text{MA} = \frac{\text{load}}{\text{effort}}$
$S = ut + \frac{1}{2}at^2$ **OR** $\Delta y = vit + ½\ g\Delta t2$ **OR** $\Delta x = vit + ½\ a\Delta t2$	$VR = \frac{S_E}{S_R}$
$F = ma$ $Fg = mg$ $W = mg$	$W = F \times \Delta y$ **OR** $W = F \times \Delta x$ $W = F\Delta \times cos\Theta$
$\tau = \perp F.s$	$\text{Efficiency} = \frac{MA}{VR}$ $\text{Efficiency} = \frac{E\ (\text{output})}{E\ (\text{input})} \times 100$
$E_k \frac{1}{2}mv^2$	$R^2 = X^2 + Y^2$
$E_p = mgh$	$F_x = Fcos\Theta$
$v = \frac{s}{t}$	$F_y = Fsin\Theta$

Copyright reserved

WAVES, SOUND AND LIGHT

$V = f\lambda$
$T = \frac{1}{f}$
$f_L = \left(\frac{v \pm v_L}{v \pm v_s}\right) f_s$
$E = hf$ **OR** $E = h\frac{c}{\lambda}$

MAGNETISM AND ELECTRICITY

$F = \frac{kQ_1Q_2}{r^2}$	$R_T = R_1 + R_2 + R_3 \ldots$
$E = \frac{kQ}{r^2}$	$\frac{1}{R_T} = \frac{1}{R_1} + \frac{1}{R_2} + \frac{1}{R_3} \ldots$
$C = \frac{K\varepsilon_0 A}{d}$	$Q = It$
$C = \frac{Q}{V}$	$V = IR$
$E = \frac{V}{d}$	$V = \frac{W}{Q}$
$E = \frac{F}{q}$	$emf = I(R + r)$ $emf = IR + Ir$
$\frac{V_P}{V_S} = \frac{N_P}{N_S}$	$\frac{V_1}{V_2} = \frac{N_1}{N_2} = \frac{I_1}{I_2}$
$W = V_q$ $W = VI\Delta t$ $W = I^2R\Delta t$ $W = \frac{V^2\Delta t}{R}$	$P = \frac{W}{\Delta t}$ $P = VI$ $P = I^2R$ $P = \frac{V^2}{R}$

Copyright reserved