higher education & training

Department:
Higher Education and Training
REPUBLIC OF SOUTH AFRICA

NATIONAL CERTIFICATE (VOCATIONAL)

ENGINEERING FABRICATION

(Second paper)

NQF LEVEL 2

(6031002)

27 November 2024 (Y-paper)
13:00–16:00

REQUIREMENTS: A2 drawing sheet

Calculators and drawing instruments may be used.

This question paper consists of 5 pages.

541Q2N2427

Copyright reserved

DEPARTMENT OF HIGHER EDUCATION AND TRAINING
REPUBLIC OF SOUTH AFRICA

NATIONAL CERTIFICATE (VOCATIONAL)
ENGINEERING FABRICATION
NQF LEVEL 2
(Second paper)
TIME: 3 HOURS
MARKS: 75

INSTRUCTIONS AND INFORMATION

1. Answer all the questions.
2. Read all the questions carefully.
3. Number the answers according to the numbering system used in this question paper.
4. Answer TWO questions on ONE side of the A2 DRAWING SHEET and the third on the reverse side.
5. Use only a black or blue pen.
6. Write neatly and legibly.

Copyright reserved

QUESTION 1

FIGURE 1 below shows an intersection between two equal diameter pipes.

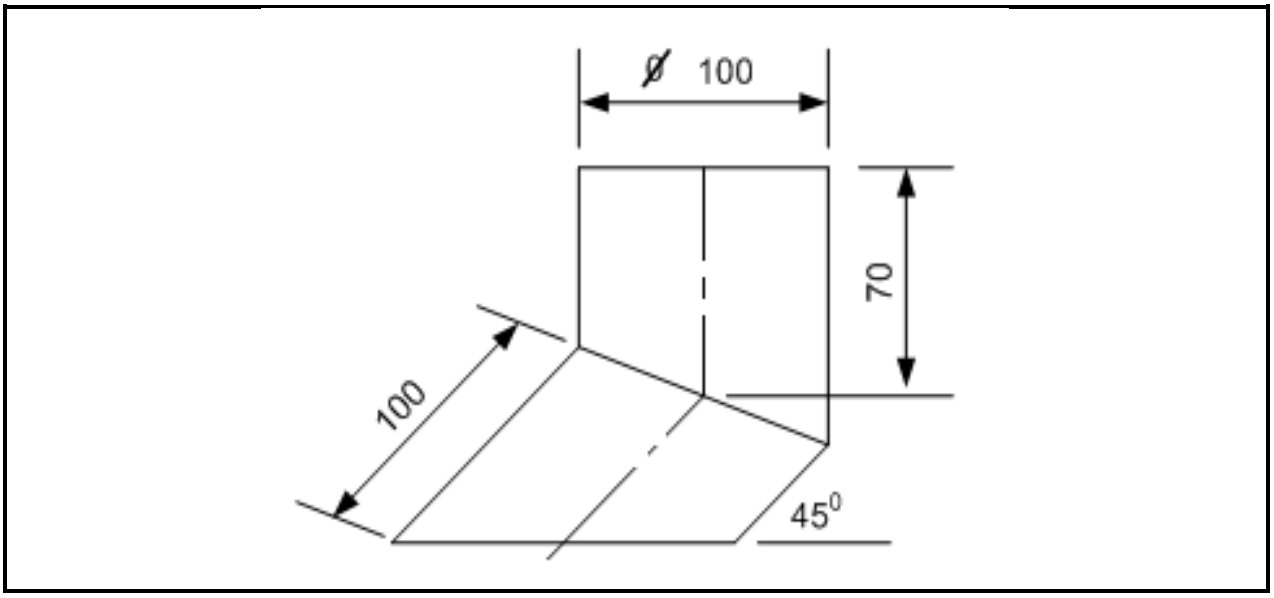

FIGURE 1

1.1 Draw, to scale 1:2, the given view. (4)

1.2 Use parallel line method and develop the pattern of the pipe positioned at 45 degree angle. (7)

1.3 Use parallel line method and develop the pattern of the pipe positioned at 90 degree angle. (7)

Marks allocation for drawing practice:

Accuracy	Neatness	Line work	Title and scale
3	1	2	1

(7)

NOTE: Open developments on the shorter side.

[25]

QUESTION 2

FIGURE 2 below shows an oblique cone which has been cut parallel to the base.

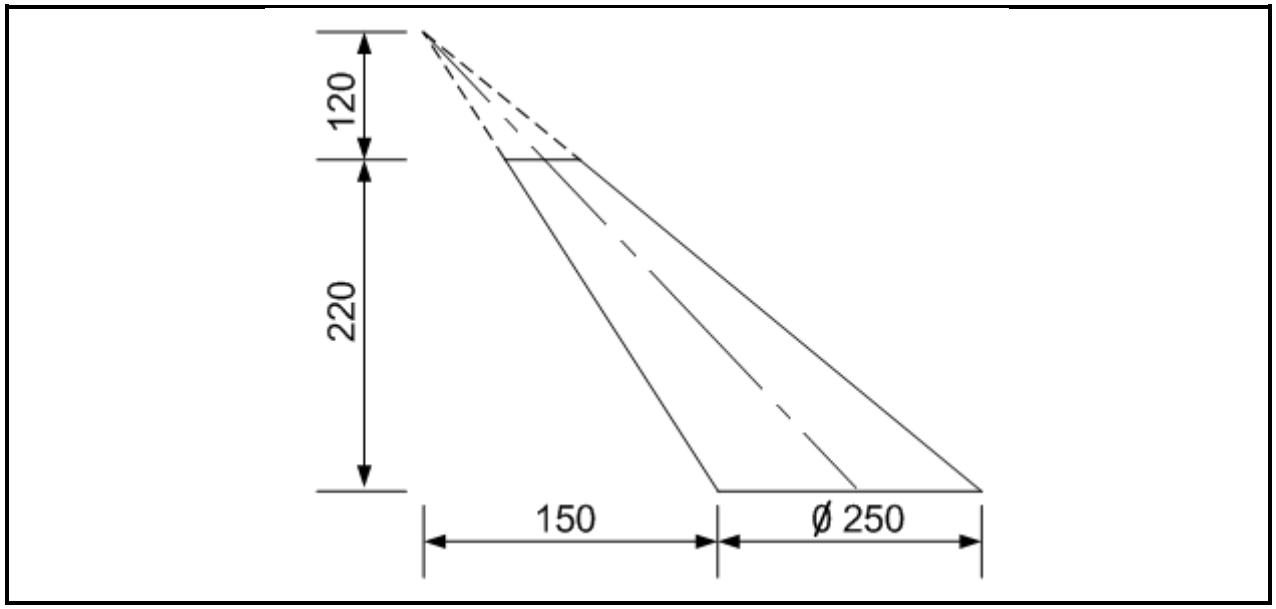

FIGURE 2

2.1 Draw, to scale 1:5, the given view. (4)

2.2 Use radial line method and develop the pattern of an oblique cone. (14)

Marks allocation for drawing practice:

Accuracy	Neatness	Line work	Title and scale
2	1	3	1

(7)

NOTE: Open development on the shorter side.

[25]

QUESTION 3

FIGURE 3 below shows two views of an offset round to rectangular transition piece.

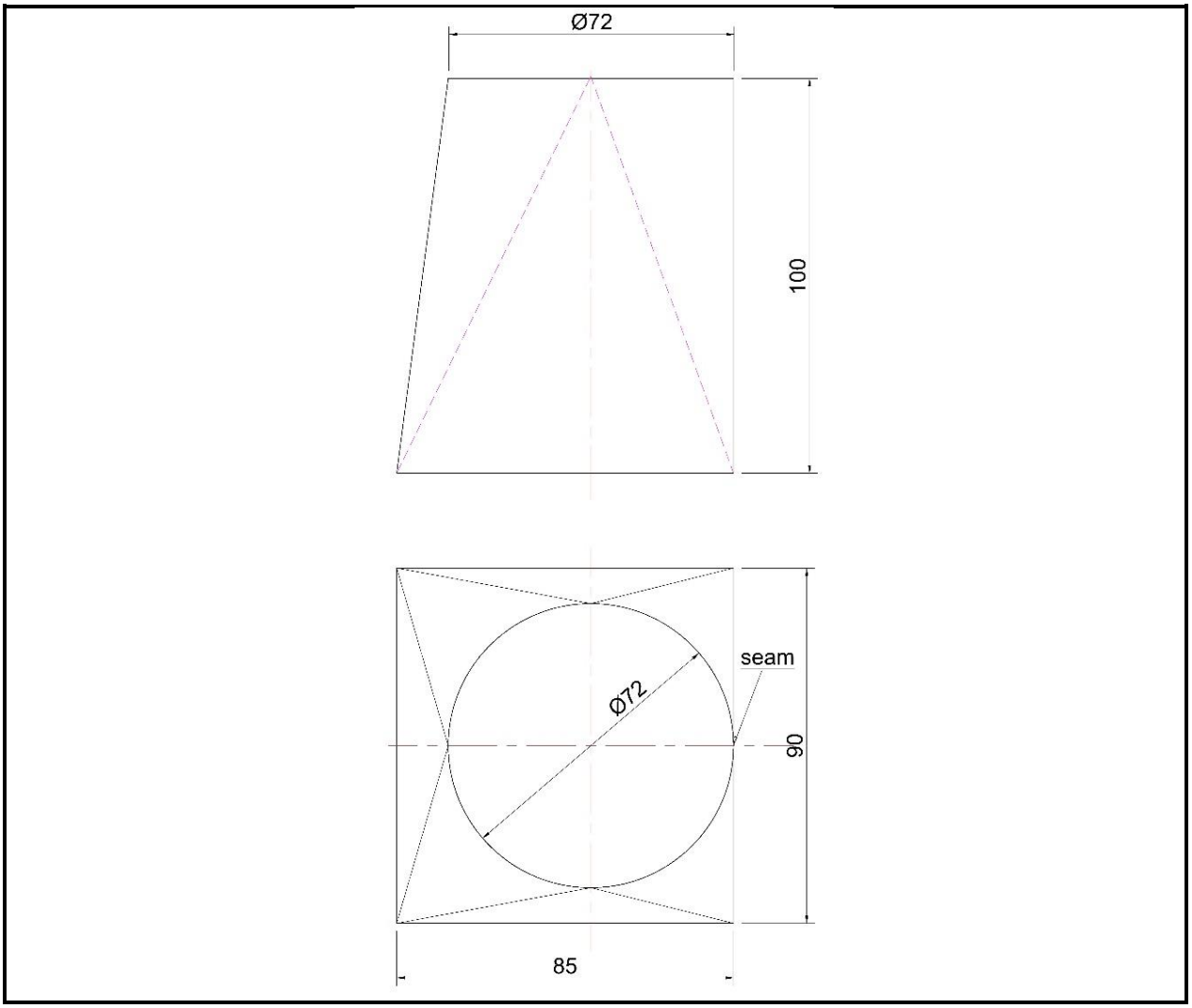

FIGURE 3

3.1 Draw, to scale 1:1, the given view. (5)

3.2 Use the triangulation method and develop the pattern of the round to rectangular transition piece. (13)

Marks allocation for drawing practice:

Accuracy	Neatness	Line work	Title and scale
3	1	2	1

(7)

NOTE: Open development on the side marked xx.

[25]

TOTAL: 75

Copyright reserved