higher education & training

Department:
Higher Education and Training
REPUBLIC OF SOUTH AFRICA

**NATIONAL CERTIFICATE (VOCATIONAL)**

# ELECTRONICS AND DIGITAL CONCEPTS FOR ROBOTICS

(Second paper)
**NQF LEVEL 3**

(10041043)

**27 November 2024 (X-paper)**
**09:00–12:00**

**This question paper consists of 4 pages.**

539Q2N2427

Copyright reserved

# DEPARTMENT OF HIGHER EDUCATION AND TRAINING
# REPUBLIC OF SOUTH AFRICA

NATIONAL CERTIFICATE (VOCATIONAL)
ELECTRONICS AND DIGITAL CONCEPTS FOR ROBOTICS
NQF LEVEL 3
(Second paper)
TIME: 3 HOURS
MARKS: 80

---

**INSTRUCTIONS AND INFORMATION**

1. Answer all the questions.
2. Read all the questions carefully.
3. Number the answers according to the numbering system used in this question paper.
4. Use only a black or blue pen.
5. Write neatly and legibly.

---

Copyright reserved 

## QUESTION 1

1.1 The circuit diagram shown below is that of a DC power supply.
You must redraw and printout this power supply circuit diagram using drawing software.
You must also design and printout the breadboard prototype of this circuit using Fritzing software.
Place your identity number at the top of each printout.

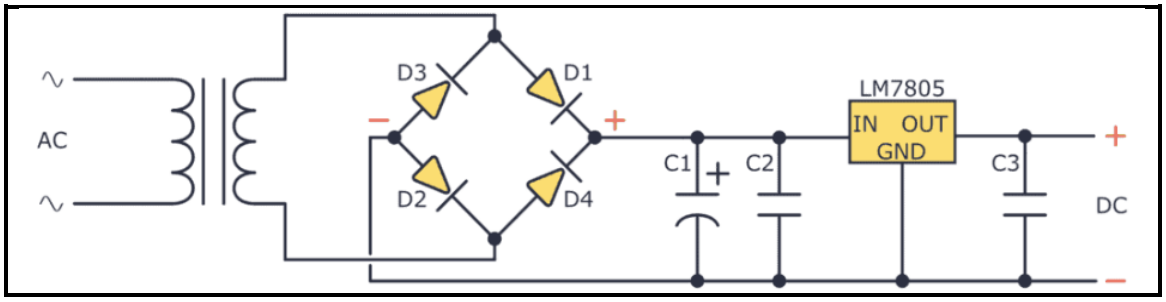


(35)

1.2 Create a bill of material for this circuit and print it as well. (5)
Place your identity number at the top of the printout.

**[40]**

## QUESTION 2

The circuit below is an astable multivibrator that uses a 555-timer integrated circuit.
You are required to design and printout its breadboard prototype using Fritzing software.
Place your identity number at the top of each printout.

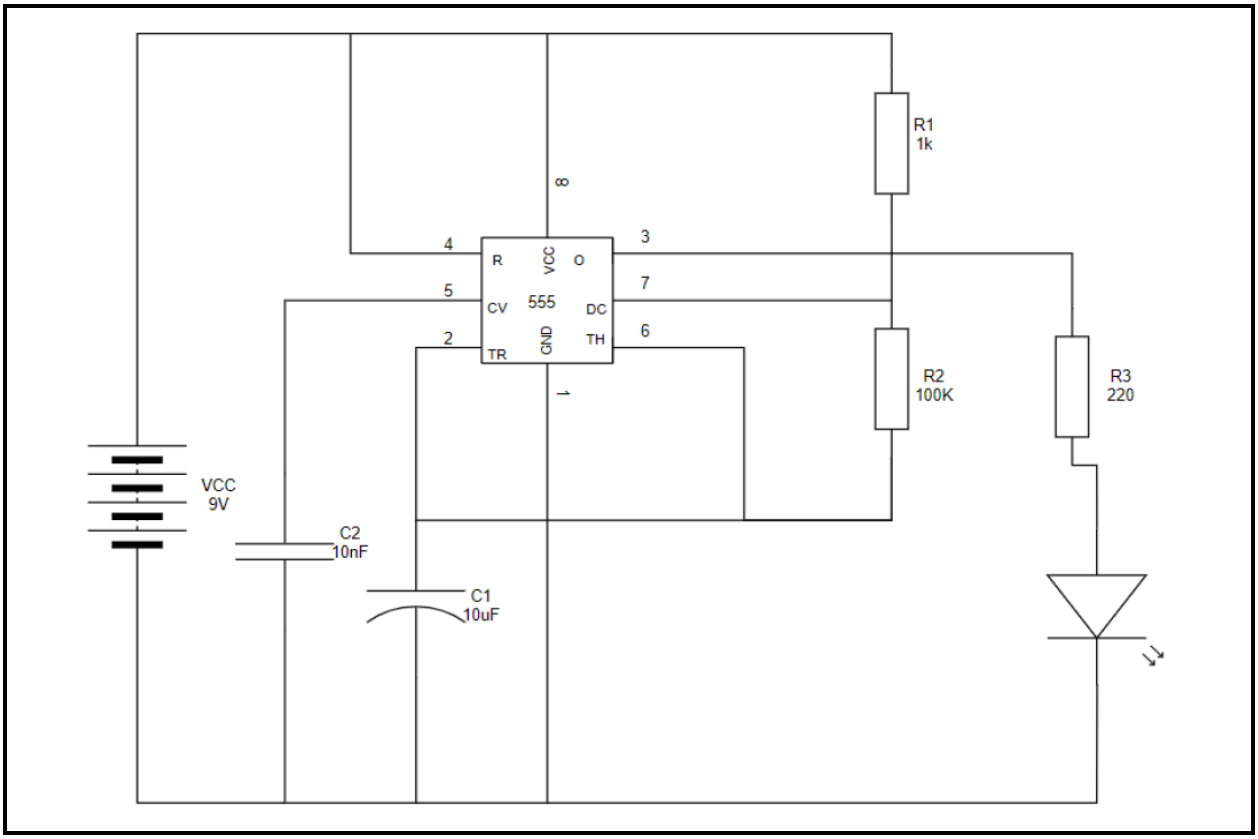


**[20]**

**QUESTION 3**

The circuit diagram below shows a circuit that detects light using an LDR.
You are required to redraw and printout this circuit using Fritzing software.
You must also design and printout the breadboard prototype of this circuit using Fritzing software.
Place your identity number at the top of each printout.

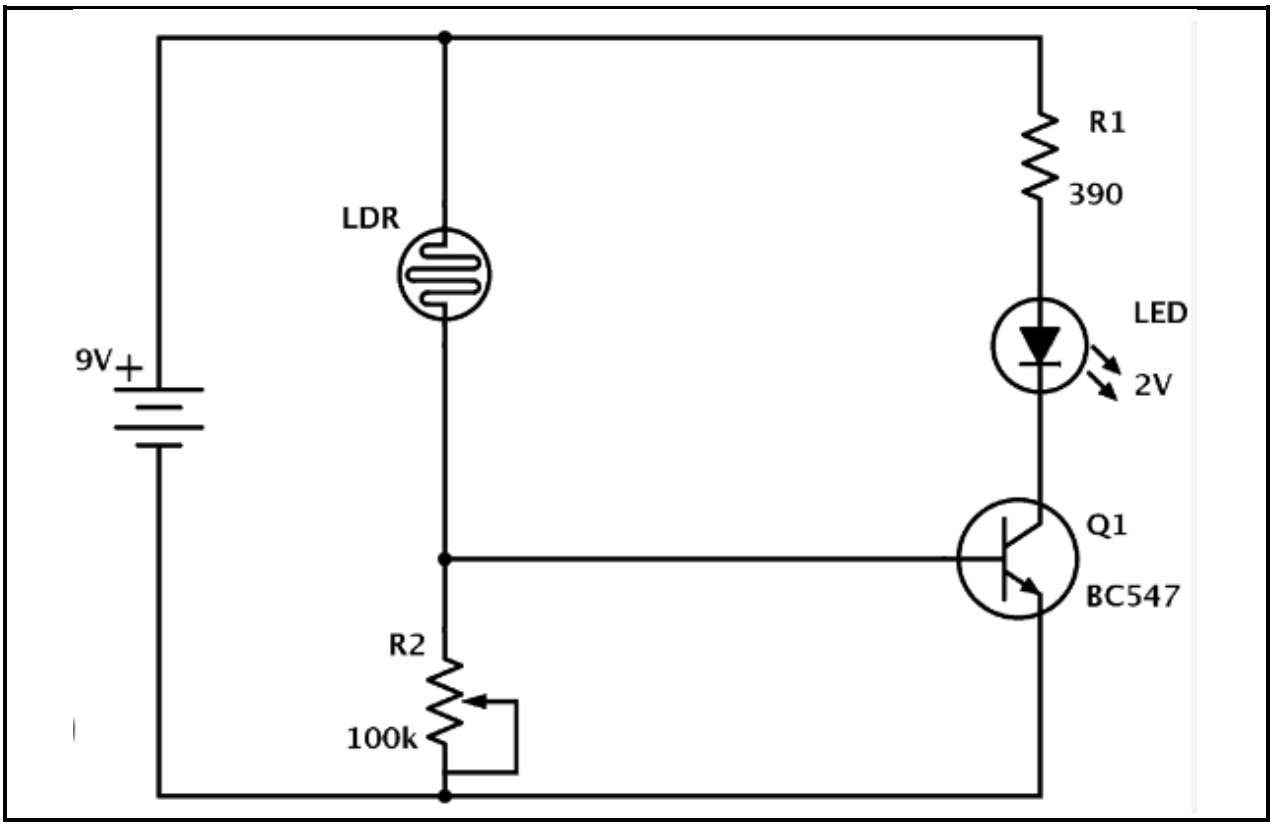


**[20]**

**TOTAL: 80**

Copyright reserved