higher education & training

Department:
Higher Education and Training
REPUBLIC OF SOUTH AFRICA

NATIONAL CERTIFICATE (VOCATIONAL)

ELECTRONICS AND DIGITAL CONCEPTS FOR ROBOTICS

NQF LEVEL 2

(Second paper)

(10041042)

27 November 2024 (Y-paper)
13:00–16:00

This question paper consists of 6 pages and 1 answer sheet.

537Q2S2427

Copyright reserved

DEPARTMENT OF HIGHER EDUCATION AND TRAINING
REPUBLIC OF SOUTH AFRICA

NATIONAL CERTIFICATE (VOCATIONAL)
ELECTRONICS AND DIGITAL CONCEPTS FOR ROBOTICS
NQF LEVEL 2
(Second paper)
TIME: 3 HOURS
MARKS: 80

INSTRUCTIONS AND INFORMATION

1. Answer all the questions.
2. Read all the questions carefully.
3. Number the printouts according to the numbering system used in the question paper.
4. Use appropriate programs such as Fritzing and draw.io.
5. Hand in only one printout per question.
6. Write examination and centre numbers correctly on the examination folder.
7. Ensure that every printout displays a printed question number and examination number.
8. Examination numbers in writing are not acceptable.
9. The time indicated at the beginning of each section is a guideline to help you finish the question paper within the allocated time.
10. The time allocated in this question paper includes printing time. No additional time will be allocated for printing unless there was a computer or printer malfunction.
11. It is your responsibility to save your work at regular intervals to prevent loss of key-in data in the event of a power failure. No additional time will be allowed to redo lost work.

Copyright reserved

QUESTION 1

1.1 Study the series-parallel circuit diagram below and use Fritzing to design the circuit on a breadboard.

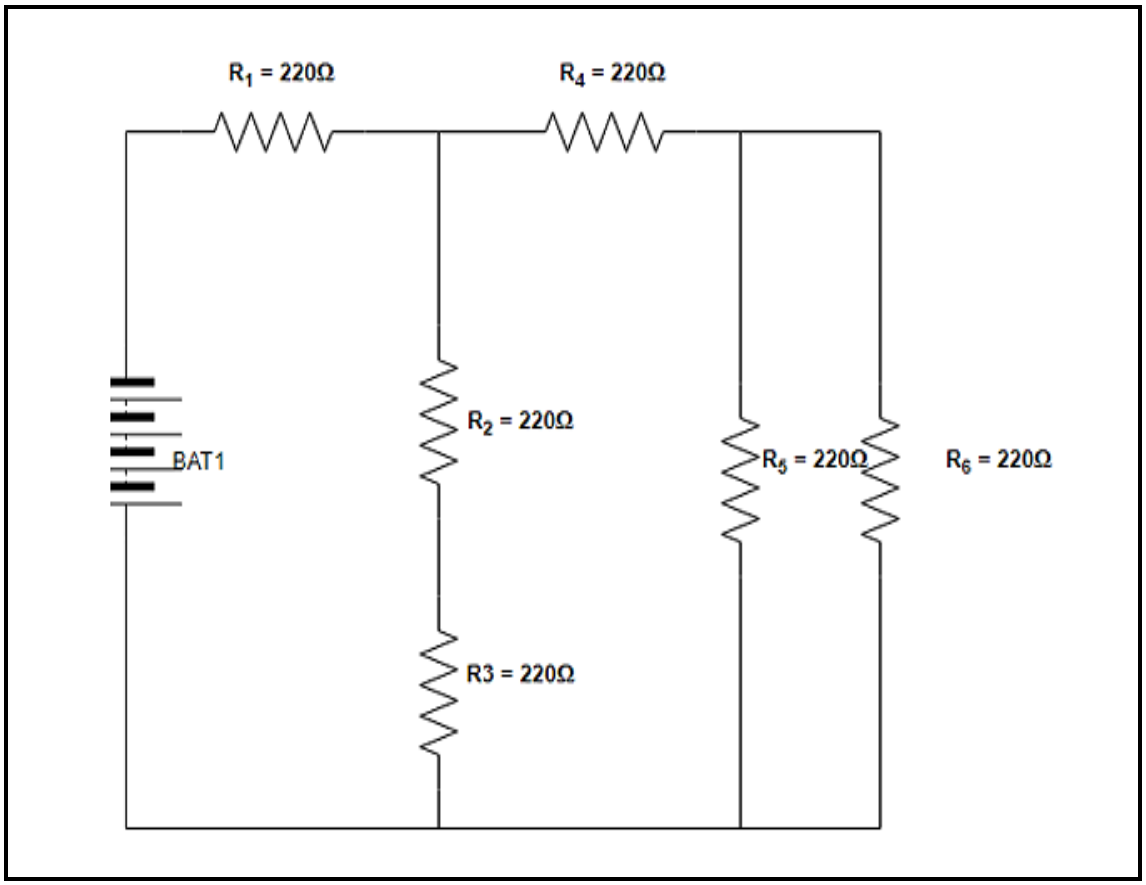

- Open Fritzing or any similar software tool.
- Design the circuit on a breadboard.
- Minimise crossover of connections.
- Use the components and sizes of components as in the diagram or as close as possible to the indicated values.
- Add a note on the Fritzing design with your examination number and question number.
- Print your design and place the printout in the examination folder. (20)

1.2 John was given a temperature-activated switch on a breadboard circuit as shown below.

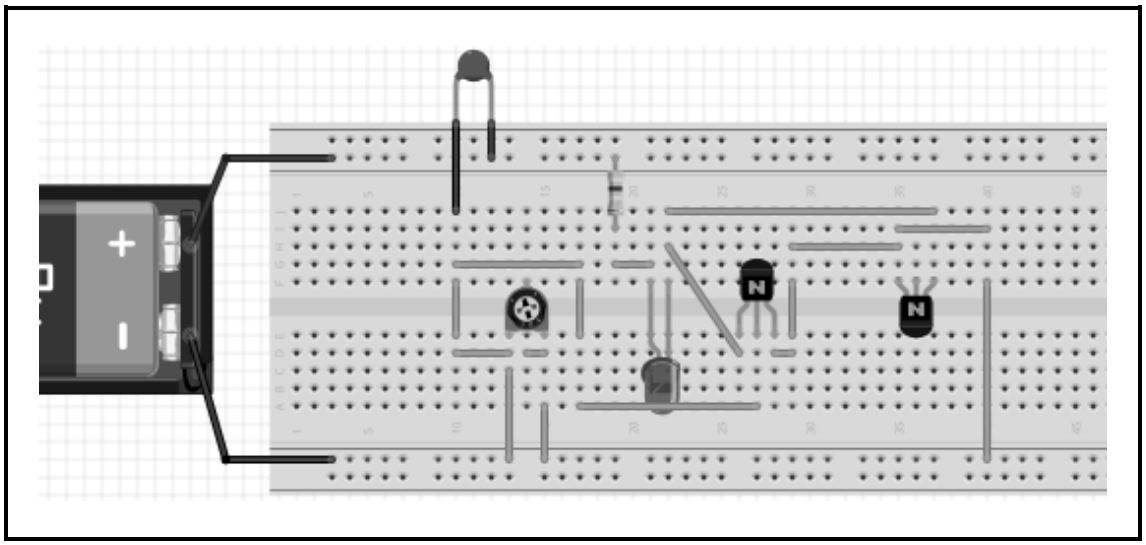

Identify the components on the breadboard circuit by writing only the answer next to the question number (1.2.1–1.2.6) on the ANSWER SHEET (attached).
(6 × 1) (6)

1.3 Redraw the circuit diagram of the given breadboard circuit on the ANSWER SHEET (attached). (14)
[40]

QUESTION 2

2.1 Jane is working on a project. She is asked to design a simple buzzer circuit as part of a timed competition. The circuit is to be used in a doorbell.

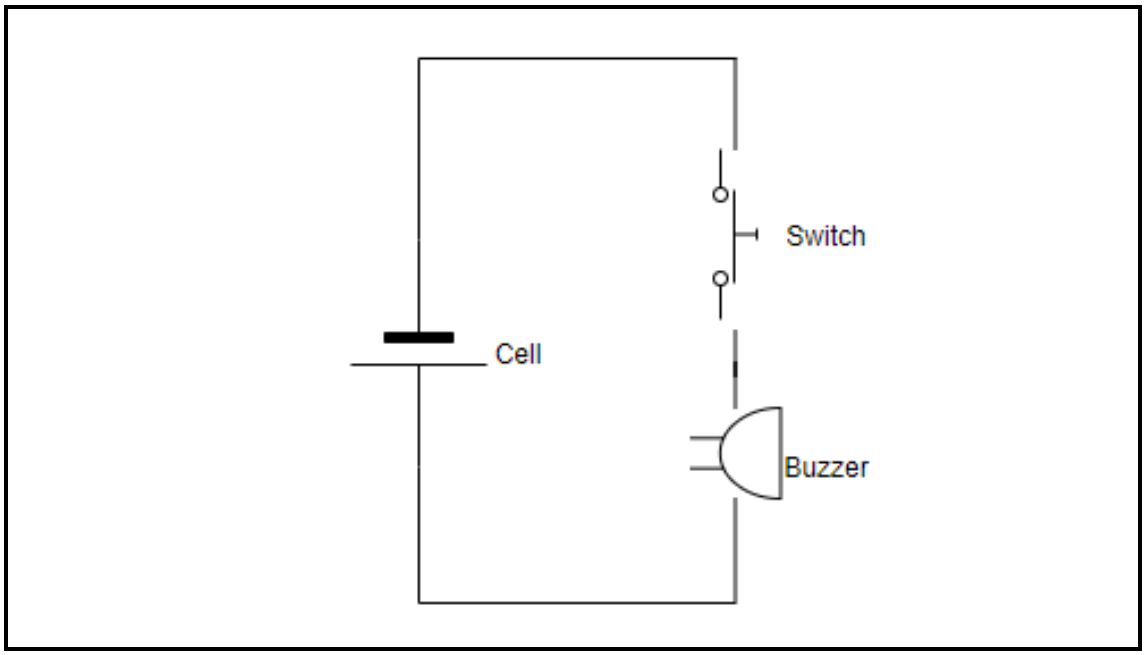

Refer to the circuit diagram shown above and design the simple buzzer diagram on a breadboard.

- Open Fritzing or any similar software tool.
- Design the circuit on a breadboard.
- Minimise crossover of connections.
- Use the components and sizes of components as in the diagram or as close as possible to the indicated values.
- Add a note on the Fritzing design with your examination number and question number.
- Print your design and place the printout in the examination folder. (20)

2.2 An AND gate application breadboard circuit is shown below.

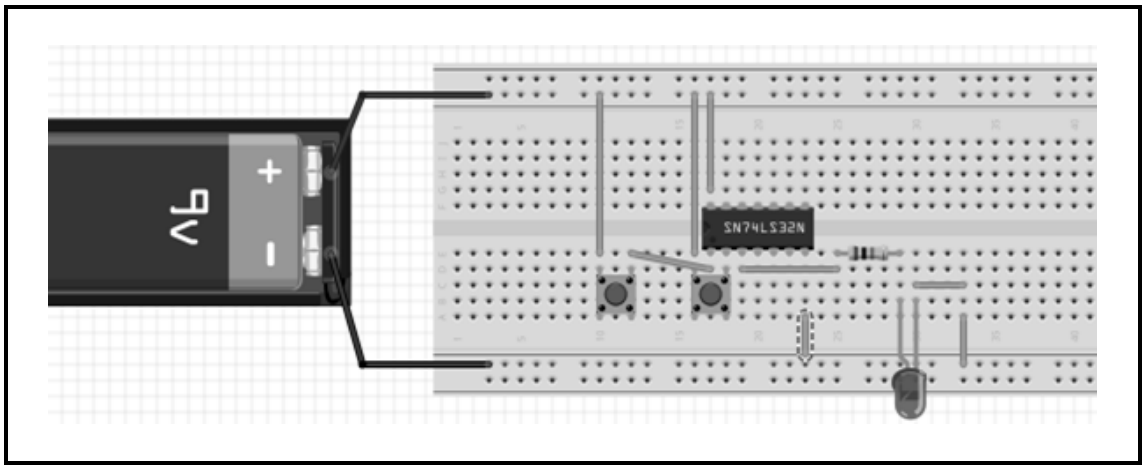

2.2.1 Draw the AND gate truth table. Use either MS Word or MS Excel to type your answer. Insert a header with your examination number (left) and question number (right). Print the document and place the printout in the examination folder. (5)

2.2.2 Design the circuit diagram of the AND gate application by using a breadboard on draw.io. Add text to the circuit diagram with your examination number and question number and print. (15)

[40]

TOTAL: 80

Copyright reserved

ANSWER SHEET **EXAMINATION NUMBER:**

1.2 1.2.1 _____

1.2.2 _____

1.2.3 _____

1.2.4 _____

1.2.5 _____

1.2.6 _____

(6 × 1) (6)

1.3

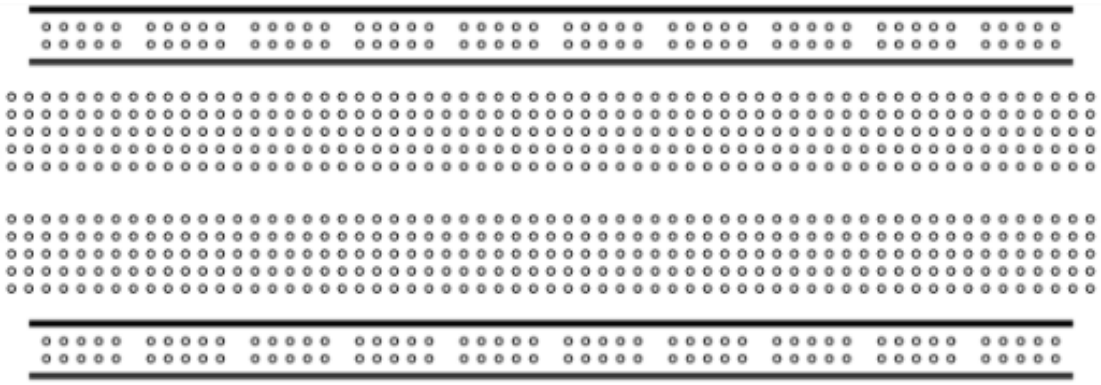

(14)

Copyright reserved