higher education & training

Department:
Higher Education and Training
REPUBLIC OF SOUTH AFRICA

NATIONAL CERTIFICATE (VOCATIONAL)

REFRIGERATION PRINCIPLES
NQF LEVEL 2

(6030052)

22 November 2024 (Y-paper)
13:00–16:00

This question paper consists of 8 pages.

497Q1N2422

Copyright reserved

DEPARTMENT OF HIGHER EDUCATION AND TRAINING
REPUBLIC OF SOUTH AFRICA

NATIONAL CERTIFICATE (VOCATIONAL)
REFRIGERATION PRINCIPLES
NQF LEVEL 2
TIME: 3 HOURS
MARKS: 100

INSTRUCTIONS AND INFORMATION

1. Answer all the questions.
2. Read all the questions carefully.
3. Number the answers according to the numbering system used in this question paper.
4. Start each section on a new page.
5. Use only a black or blue pen.
6. Write neatly and legibly.

Copyright reserved

QUESTION 1

1.1 Draw a block diagram of a vapour compression refrigeration system. Indicate the following components clearly in order on the drawing:

- Expansion valve
- Liquid receiver
- Compressor
- Evaporator
- Accumulator
- Condenser
- Filter drier

(9)

1.2 State the purpose of the following components:

1.2.1 Crankcase heater

1.2.2 Mufflers

(2 × 2) (4)

1.3 Convert 366 K to degrees Celsius. (1)

1.4 What is the condition of the refrigerant at the outlet of the expansion device? (1)

[15]

QUESTION 2

2.1 What is the difference between an *alternating current* and a *direct current*? (4)

2.2 Briefly explain the following:

2.2.1 Series circuit (1)

2.2.2 Series-parallel circuit (2)

2.3 Show by means of a circuit diagram how two resistors in parallel can be connected to one resistor in series across the supply voltage. (2)

2.4 Choose the correct word from those given in brackets. Write only the word next to the question number in the ANSWER BOOK.

Copper is a (good/poor) conductor of electricity. (1)

[10]

Copyright reserved

QUESTION 3

3.1 Name an instrument used in electrical circuits which has several functions in one unit. (1)

3.2 State TWO uses of a bending spring used for PVC conduit. (2)

3.3 FIGURE 1 show a gauge manifold used in a refrigeration system. Name the parts by writing the answer next to the question number (3.3.1–3.3.6) in the ANSWER BOOK.

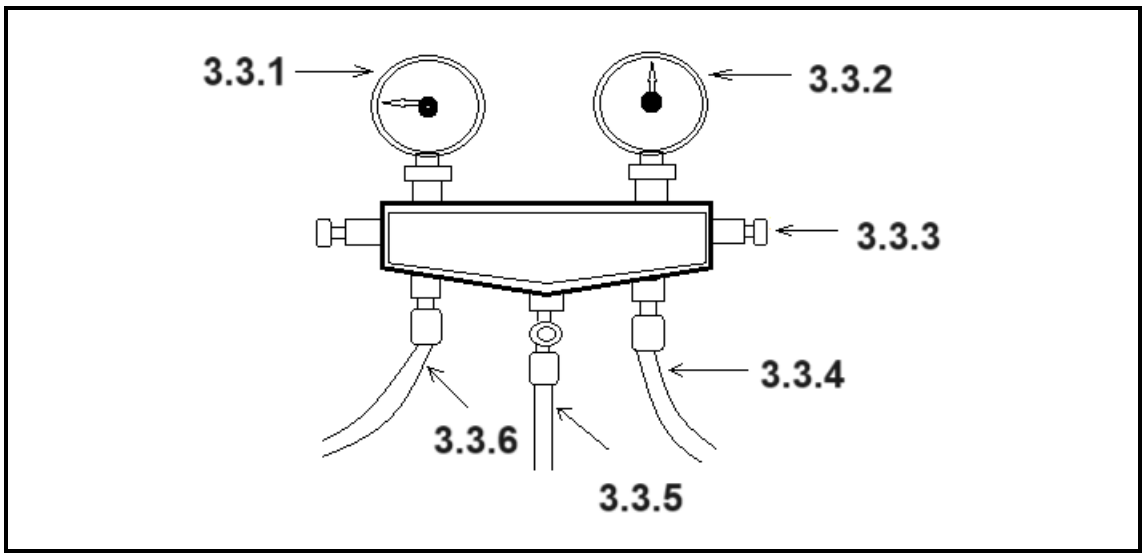

FIGURE 1: GAUGE MANIFOLD

(6 × 1) (6)

3.4 Name THREE issues to be considered in the care of a flaring tool. (3)

[12]

QUESTION 4

4.1 Identify the type of refrigerant stored in containers with the following colours:

4.1.1 Light green

4.1.2 Light maroon

4.1.3 Orange

(3 × 1) (3)

4.2 When a technician works with refrigerant (particularly in the liquid phase), he/she should wear appropriate safety equipment.

Give ONE word that describes the following:

4.2.1 A non-absorbent material that protect the hands.

4.2.2 Protection against liquid splashes on the body, arms and legs.

4.2.3 Equipment that protects the eyes.

(3 × 1) (3)

4.3 State TWO procedures to be followed in the event of a fire when working with refrigerant. (2)

[8]

QUESTION 5

5.1 Briefly explain why it is important to keep pipes clean and dry. (4)

5.2 Name the TWO components between which a capillary tube it fitted in a refrigeration system. (2)

5.3 Distinguish between *silver soldering* and *brazing*. (4)

5.4 Name the following fitting:



(1)

5.5 Briefly explain the term, *solvent*, as used in refrigeration systems. (2)

5.6 Choose a description from COLUMN B that matches an item in COLUMN A. Write only the letter (A–C) next to the question number (5.6.1–5.6.3) in the ANSWER BOOK.

COLUMN A		COLUMN B	
5.6.1	Trichloroethane	A	frequently used in refrigeration
5.6.2	Trichloroethylene	B	used in small-scale operations
5.6.3	Carbon tetrachloride	C	used in equipment specially designed for degreasing a well-ventilated area free from any draught



(3 × 1) (3)

5.7 At what temperature does the suction line drop when it is cold? (1)

5.8 Name the FIVE consequences of using insufficient insulation. (5)
[22]

QUESTION 6

6.1 Explain the purpose of the following fixing tools:

6.1.1 Crimping tool

6.1.2 Open-ended spanner



6.1.3 Cable knife

6.1.4 Wire stripper

(4 × 2) (8)

6.2 Give ONE term for each of the following descriptions by writing it next to the question number (6.2.1–6.2.4) in the ANSWER BOOK.

6.2.1 It clamps a driving hub into position along a shaft.

6.2.2 When the hub is in position and the key must be driven into place.



6.2.3 It fastens a member than slides over it either in the shaft or in the hub.

6.2.4 It is used in machine tool construction and adjusts itself to its seat.

(4 × 1) (4)
[12]

QUESTION 7

7.1 Which ONE of the following is NOT true when identifying and inspecting refrigerant containers?

A Read the identification on the containers
B Charge the wrong refrigerant into the system
C Look at the colour of the container
D Take a sample for laboratory testing (1)

7.2 When a refrigeration mechanic fills the service cylinder, he/she must ensure that the cylinder is not overfilled.

Given that TM = 12,4 kg and WC = 26,8 kg,

7.2.1 What do the following acronyms stand for, when checking the markings on a cylinder for correctness?

(a) R-number

(b) WC

(c) TM

(3 × 1) (3)

7.2.2 Calculate the maximum gross mass of the cylinder. (2)

7.3 Determine the maximum quantity of refrigerant that can be charged into a container with an original mass of 12,4 kg. The final maximum gross mass of the cylinder is 28,4 kg. (2)

7.4 Explain the term, *evacuation*. (2)

7.5 For refrigeration to work efficiently, it must be free from contaminants.

7.5.1 Which equipment will be used to remove moisture from the system? (1)

7.5.2 What is the consequence of moisture in a refrigeration system? (2)

7.5.3 What happens if oil is not changed regularly and becomes contaminated? (2)

7.6 State the corrective measures if a leak is found in the positions mentioned below:

7.6.1 Flange connection

7.6.2 Brazed point

(2 × 1) (2)

Copyright reserved

7.7 Name the simplest and safest method of leak testing that can even performed by an inexperienced person. (1)

7.8 State the THREE disadvantages of the method referred to in QUESTION 7.7 above. (3)

[21]



TOTAL: 100

Copyright reserved