higher education & training

Department:
Higher Education and Training
REPUBLIC OF SOUTH AFRICA

NATIONAL CERTIFICATE (VOCATIONAL)

ELECTRICAL SYSTEMS AND CONSTRUCTION
NQF LEVEL 4

(12041034)

22 November 2024 (X-paper)
09:00–12:00

This question paper consists of 8 pages.

451Q1N2422

Copyright reserved

DEPARTMENT OF HIGHER EDUCATION AND TRAINING
REPUBLIC OF SOUTH AFRICA

NATIONAL CERTIFICATE (VOCATIONAL)
ELECTRICAL SYSTEMS AND CONSTRUCTION
NQF LEVEL 4
TIME: 3 HOURS
MARKS: 100

INSTRUCTIONS AND INFORMATION

1. Answer all the questions.
2. Read all the questions carefully.
3. Number the answers according to the numbering system used in this question paper.
4. Use only a black or blue pen.
5. Write neatly and legibly.

Copyright reserved

QUESTION 1

1.1 Indicate whether the following statements are TRUE or FALSE by writing only 'True' or 'False' next to the question number (1.1.1–1.1.10) in the ANSWER BOOK.

1.1.1 Pothead connectors are used to connect underground cables to overhead cables.

1.1.2 A surge arrestor is used to limit the rise in voltage when a power line is struck by lightning.

1.1.3 A capacitor bank is a security device that is normally used in oil absorbed transformers.

1.1.4 The ring feed is the best possible distribution method used to supply rural customers.

1.1.5 Sectionalisers in a substation are used to monitor the distribution and use of electricity.

1.1.6 Arcing horns are used to protect transmission conductors, insulators, transformers, bushings and other transmission equipment from lightning.

1.1.7 A Buchholz relay is a ribbon which melts when subjected to a specified current.

1.1.8 The main function of an oil conservator tank in a three-phase power transformer is to ensure that there is enough oil inside the transformer.

1.1.9 Corona is a small amount of sound generated on transmission lines.

1.1.10 Sleeves on transmission lines are used as a protective device against a sudden increase in power.

(10 × 1) (10)

1.2 Switches, fuses, and circuit breakers are rated for a specific area of application.

Describe the following ratings that must be considered when selecting switchgears:

1.2.1 Rated short-time current

1.2.2 Rated peak making current

1.2.3 Rated frequency

1.2.4 Degree of protection

(4 × 1) (4)

Copyright reserved

1.3 State TWO possible causes of damages that might occur if an alternator is not disconnected from the grid in the correct way. (2)

1.4 What is the function of the stators in the turbine in a coal-fired power station. (1)

1.5 Name THREE components of a wet cooling system. (3)

[20]

QUESTION 2

2.1 Identify the following symbols used in electrical circuits:

2.1.1



2.1.2



2.1.3



2.1.4

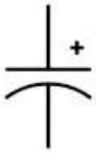

2.1.5

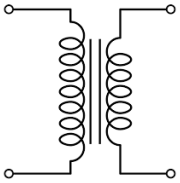

(5 × 1) (5)

2.2 Draw a neat, labelled main (power) circuit diagram of a direct-on-line starter used to control a three-phase induction motor. (4)

2.3 List any FOUR tools that will be required to build the circuit in question 2.2. (4)

2.4 Name TWO types of electrical diagrams that can be found on electrical drawings. (2)
[15]

QUESTION 3

3.1 Mr Makofane, an electrician at Eskom, was assigned to work at Seboka substation. His supervisor instructed him to work on switchgear that was not properly isolated and with the result Mr Makofane got injured in the process.

3.1.1 What did the employer neglect to do according to the OHS Act? (1)

3.1.2 What is Mr Makofane supposed to do before he starts to work on any electrical installation or equipment according to the OHS Act? (2)

3.2 Work plan is a very important document on any construction site.

List FIVE things a work plan must give details of before the practical work begins. (5)

3.3 List THREE fundamental requirements for cables when designing a medium-voltage supply network. (3)

3.4 State THREE obstacles affecting the height of the poles when designing overhead transmission lines. (3)

3.5 How does the change in environmental temperatures affect overhead conductors? (1)
[15]

Copyright reserved

QUESTION 4

4.1 A substation or switchyard is the point at which a power grid is connected to a residential distribution system, or to an industrial plant.

Briefly explain the following components that you may find in a switchyard:

4.1.1 Arching horn

4.1.2 SCADA nodes

4.1.3 Right of way (ROW)

(3 × 2) (6)

4.2 Technicians and electricians refer to electrical floor plans during the construction phase.

List FIVE things you should consider when reading a floor plan. (5)

4.3 What is the purpose of an emergency stop button? (2)

4.4 State the function of the following test instruments:

4.4.1 Clip-on-meter

4.4.2 Impedance analyser

4.4.3 Thumper or pulse generator

(3 × 1) (3)

4.5 Before a new electrical installation is permanently connected to the supply, a certificate of compliance (COC) must be issued.

4.5.1 What is the purpose of the CoC.

4.5.2 Name TWO persons who are authorised to do inspections on electrical installations.

(2 × 2) (4)

[20]

Copyright reserved

QUESTION 5

5.1 Refer to Figure 1 below of an oil conservator tank of a 132 kV/11 kV power transformer and answer the questions that follow.

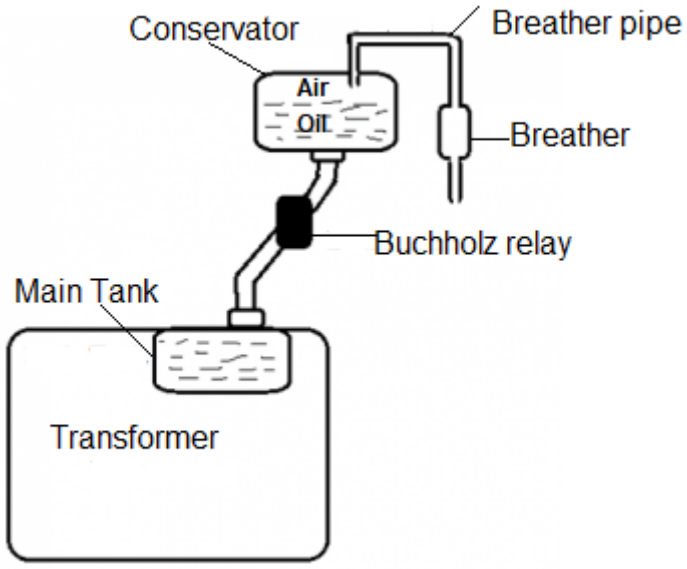

FIGURE 1

5.1.1 What is the function of the Buchholz relay? (2)

5.1.2 What does it mean if the silica gel is pink in colour? (1)

5.1.3 What correction action will you take if the oil level is low, and the transformer is overheating? (3)

5.2 What is the importance of using a schematic diagram during fault-finding? (1)

5.3 Determining the best solution is one of the steps used in fault-finding to solve electrical problems.

State FOUR possible risks that should be considered at this stage. (4)

5.4 A three-phase electric motor is a rotating machine designed to operate while being supplied by a three-phase alternating voltage source, and they are controlled by two circuit.

5.4.1 What is the function of the control circuit? (1)

5.4.2 State TWO advantages of three-phase motors has over single-phase motors. (2)

5.4.3 State ONE application of three-phase motors. (1)

[15]

Copyright reserved

QUESTION 6

6.1 Complete the following sentences by writing only the missing word or words next to the question number (6.1.1–6.1.5) in the ANSWER BOOK.

6.1.1 … allow a series of connected cells to continue supplying power at a reduced voltage.

6.1.2 The percentage of the battery that has been discharged, is called the …

6.1.3 The device used when connecting the solar array to the grid, is called a/an …

6.1.4 … is a device that converts sunlight into electrical energy.

6.1.5 Before installing any solar system, data manuals should be analysed correctly with regard to the …

(5 × 1) (5)

6.2 State THREE disadvantages of using tracking mounts. (3)

6.3 Name THREE components of a solar system that consumes energy which prevents the solar system from being 100% efficient. (3)

6.4 The A-to-Z Solar company made a recommendation to a customer on the purchase of a charging controller with an input voltage of 300 V, a solar panel rated at 19 V, 8 A and 152 W.

6.4.1 Calculate the number of panels to be connected in series to deliver the required voltage. (2)

6.4.2 Calculate the groups of panels to be connected in parallel to deliver the maximum current. (2)

[15]

TOTAL: 100

Copyright reserved