higher education & training

Department:
Higher Education and Training
REPUBLIC OF SOUTH AFRICA

NATIONAL CERTIFICATE (VOCATIONAL)

WELDING
NQF LEVEL 3

(6031033)

21 November 2024 (X-paper)
09:00–12:00

Non-programmable calculators may be used.

This question paper consists of 5 pages.

403Q1N2421

Copyright reserved

DEPARTMENT OF HIGHER EDUCATION AND TRAINING
REPUBLIC OF SOUTH AFRICA

NATIONAL CERTIFICATE (VOCATIONAL)
WELDING
NQF LEVEL 3
TIME: 3 HOURS
MARKS: 100

INSTRUCTIONS AND INFORMATION

1. Answer all the questions.
2. Read all the questions carefully.
3. Number the answers according to the numbering system used in this question paper.
4. Start each section on a new page.
5. Use only a black or blue pen.
6. Write neatly and legibly.

Copyright reserved

QUESTION 1

1.1 List FOUR welding defects that may occur when doing shielded metal arc welding (SMAW). (4)

1.2 List FOUR advantages of shielded metal arc welding (SMAW). (4)

1.3 List TWO disadvantages of shielded metal arc welding (SMAW). (2)

[10]

QUESTION 2

2.1 FIGURE 1 below shows a shielded metal arc welding process (SMAW). Name the labelled components by writing only the answer next to the letter (A–J) in the ANSWER BOOK.

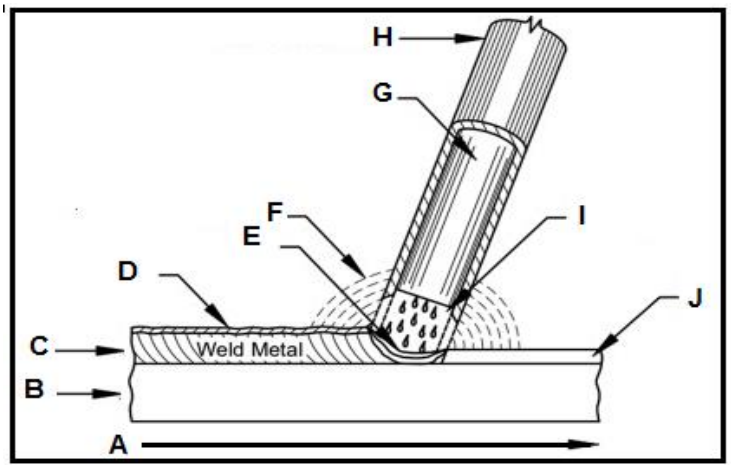

FIGURE 1 (10)

2.2 FIGURE 2 shows the specification number of an electrode. Name each labelled symbol by writing only the answer next to the letter (A–D) in the ANSWER BOOK.

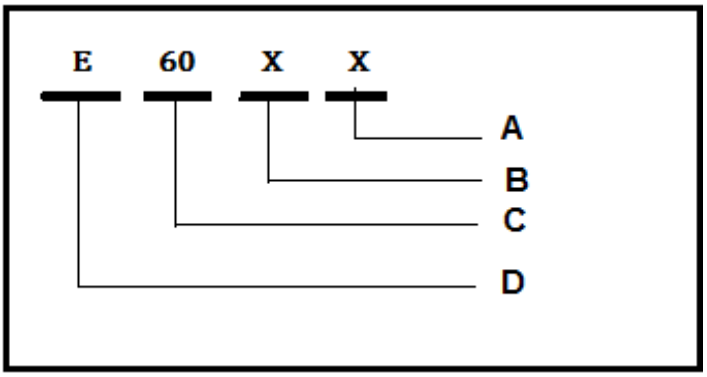

FIGURE 2 (4)

2.3 Give a solution to resolve the issue of damp welding electrodes. (2)

2.4 Explain the difference between run out length and run out ratio. (4)

2.5 List FIVE hazards associated with Shielded Metal Arc Welding (SMAW). (5)

[25]

Copyright reserved

QUESTION 3

3.1 Name the TWO types of oxy-acetylene welding torches. (2)

3.2 State THREE positions were oxy-acetylene welding can be done. (3)

3.3 Explain how one would eliminate the following hazards with regards to oxy-acetylene gasses:

3.3.1 Flashback (4)

3.3.2 Gas cylinder breach (2)

3.3.3 Oxygen explosion (2)

3.4 State how one would prepare the work piece prior to welding. (3)

3.5 List FOUR causes of weld undercut in oxy-acetylene welding. (4)

[20]

QUESTION 4

4.1 List FIVE advantages of gas tungsten arc welding (GTAW). (5)

4.2 State the function of the shielding gas. (4)

4.3 FIGURE 3 below shows a close up view of the gas tungsten arc welding (GTAW) process. Name the labelled components by writing only the answer next to the letter (A–G) in the ANSWER BOOK.

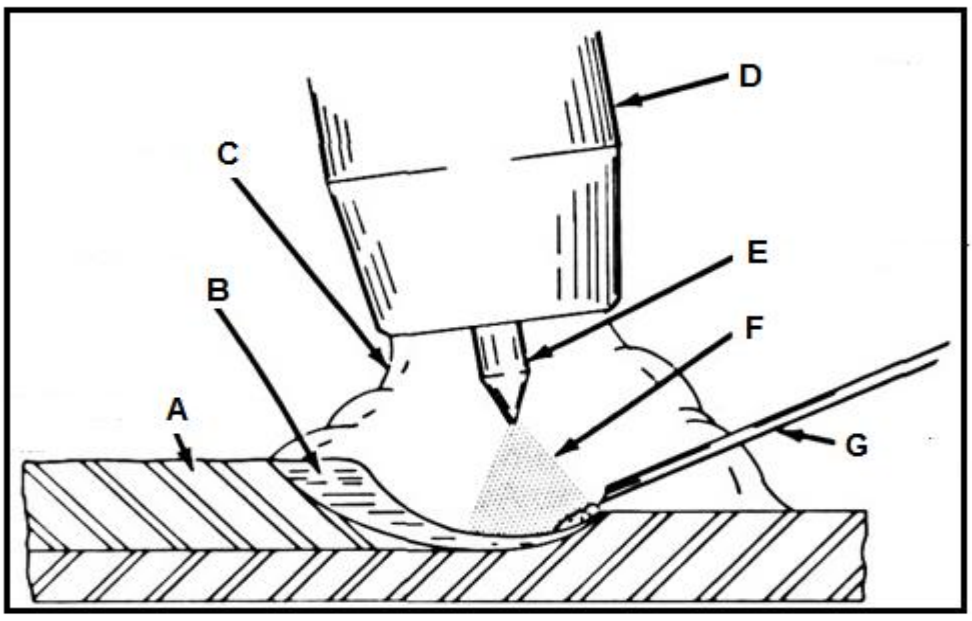

FIGURE 3 (7)

4.4 State the meaning of the following terms associated with the gas tungsten arc welding (GTAW) process.

4.4.1 Weld pool

4.4.2 Polarity

(2 × 2) (4)

4.5 List FIVE causes of cracks forming during gas tungsten arc welding (GTAW). (5)
[25]

QUESTION 5

5.1 FIGURE 4 below shows a metal inert gas welding (MIG) set up. Name the labelled components by writing only the answer next to the letter (A–E) in the ANSWER BOOK.

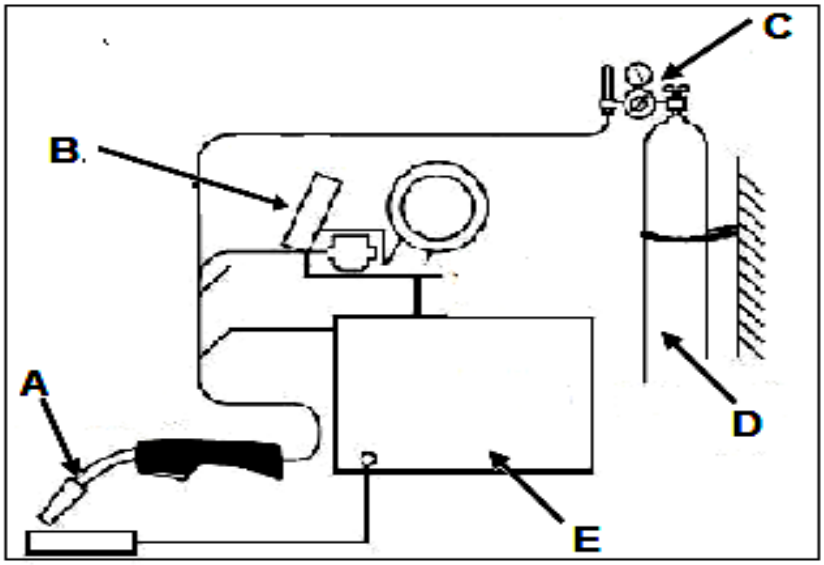

FIGURE 4 (5)

5.2 List SIX safety precautions that should be taken to prevent shocks and burns during metal insert gas welding (MIG). (6)

5.3 Calculate the amperage required to weld a plate of 8 mm. (4)

5.4 Explain what *radiographic inspection* is. (5)
[20]

TOTAL: 100

Copyright reserved