higher education & training

Department:
Higher Education and Training
REPUBLIC OF SOUTH AFRICA

NATIONAL CERTIFICATE (VOCATIONAL)

CONCRETE STRUCTURES
NQF LEVEL 3

(12020343)

21 November 2024 (X-paper)
09:00–12:00

This question paper consists of 7 pages and 2 addenda.

361Q1N2421

Copyright reserved

DEPARTMENT OF HIGHER EDUCATION AND TRAINING
REPUBLIC OF SOUTH AFRICA

NATIONAL CERTIFICATE (VOCATIONAL)
CONCRETE STRUCTURES
NQF LEVEL 3
TIME: 3 HOURS
MARKS: 100

INSTRUCTIONS AND INFORMATION

1. Answer all the questions.
2. Read all the questions carefully.
3. Number the answers according to the numbering system used in this question paper.
4. Use only a black or blue pen.
5. Write neatly and legibly.

Copyright reserved

QUESTION 1: THE THEORY AND USE OF REINFORCED CONCRETE

1.1 Below is a list of reasons why concrete cracks or collapses. Give a short description of each reason.

1.1.1 Corrosion (2)

1.1.2 Restraint (2)

1.1.3 Settlement (1)

1.1.4 Thermal shrinkage (2)

1.2 Make a neat, labelled drawing to indicate the different forces and stresses that will occur in a simply supported beam that is supported on both ends with an overhang on the right-hand end of the beam. The forces working on the beam can be taken as a distributed load over the whole area of the beam owing to gravity.

Show the direction of the forces with arrows. (10)

1.3 Draw neat sketches of the following types of foundation:

1.3.1 Reinforced Pad Foundation (2)

1.3.2 Strip foundation (2)

1.3.3 Reinforced Pile Cap Foundation (2)

1.3.4 Reinforced Raft Foundation (2)

[25]

QUESTION 2: REINFORCED CONCRETE IN CONSTRUCTION

2.1 High-tensile and mild-steel deformed bars made in South Africa have different patterns. Discuss the patterns below.

2.1.1 

2.1.2 

2.1.3 

(2 × 3) (6)

2.2 List THREE advantages and THREE disadvantages of steel mesh. (3 × 2) (6)

2.3 Discuss the following terms applicable to cold-drawn and cold-rolled steel.

2.3.1 Drawing

2.3.2 Deep drawing

2.3.3 Cold rolling

2.3.4 Pressing

2.3.5 Cold working

(2 × 5) (10)

2.4 List THREE commonly used sizes or nominal diameters of reinforcement. (3)
[25]

QUESTION 3: REINFORCING DOCUMENTATION

3.1 Use the information given in FIGURE 1 below to make TWO neat cross-sectional drawings of the concrete beam at AA and BB showing the hidden bars and detail. The drawings must include the placing of the bars. All the details and labels must be included.

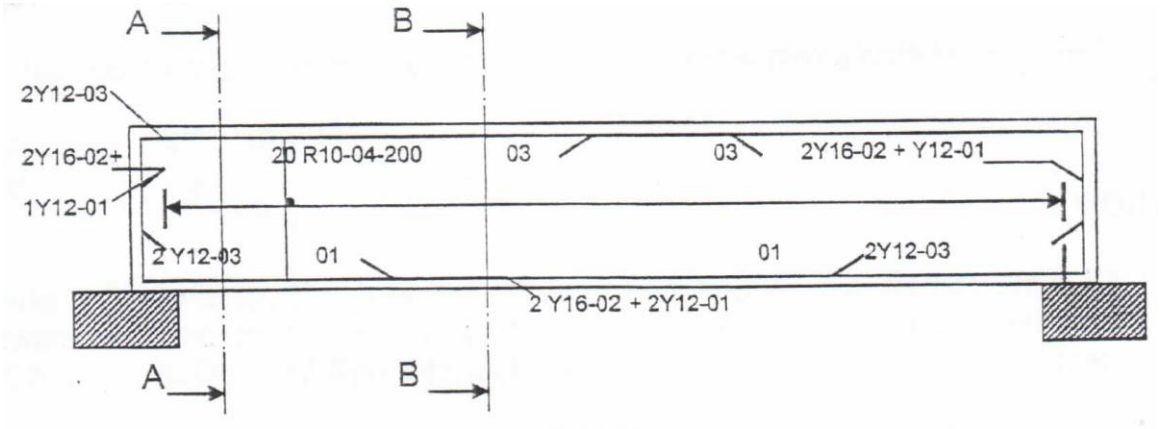

(14)

FIGURE 1

3.2 Use the steel code below of TWO column bases that were identified on a drawing, to complete the bending schedule (FIGURE 2). Do not copy the schedule (FIGURE 2), but use the attached answer sheet (ADDENDUM B) to complete the schedule.

18R8-02-250										
A	B	C	D	E	F	G	H			
Member							Bending dimensions			
	Bars per member	Total bars	Type/ diameter	Bar mark	Shape code	Total length	A	B	C	D
					42		150	300	100	120

FIGURE 2 (6)

3.3 Use the SABS 82 SHAPE CODES (ADDENDUM A) to draw the profiles of the steel members in QUESTION 3.2 with the correct measurements on the drawing. Use a scale of 1:10 in your drawing. (5)

[25]

QUESTION 4: FABRICATION OF REINFORCING STEEL

4.1 Identify the following ties used in construction:

4.1.1

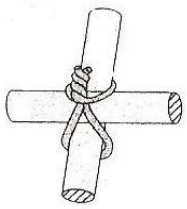

4.1.2

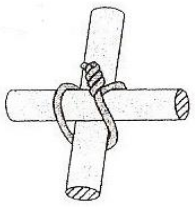

4.1.3

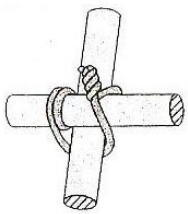

4.1.4 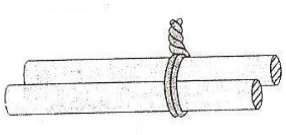

4.1.5 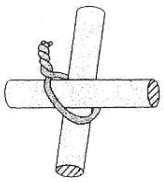

4.1.6 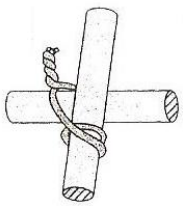

(6 × 1) (6)

4.2 Name TWO types of machines used to bend and cut steel in a steel yard. (2)

4.3 Redraw the following table in your ANSWER BOOK and explain the purpose, the use and the information that should be contained in the documents used in a steel yard.

TYPE OF DOCUMENT	WHAT ITS PURPOSE IS	WHO USES IT	THE INFORMATION IT GIVES
Cutting and bending sheet	(2)	(1)	(1)
Bar label	(1)	(1)	(1)
Delivery note	(1)	(1)	(1)

(10)

4.4 A variety of activities takes place in a steel yard. Complete the following process taking place in a steel yard by writing only the answer next to the letter (a–e) in your ANSWER BOOK.

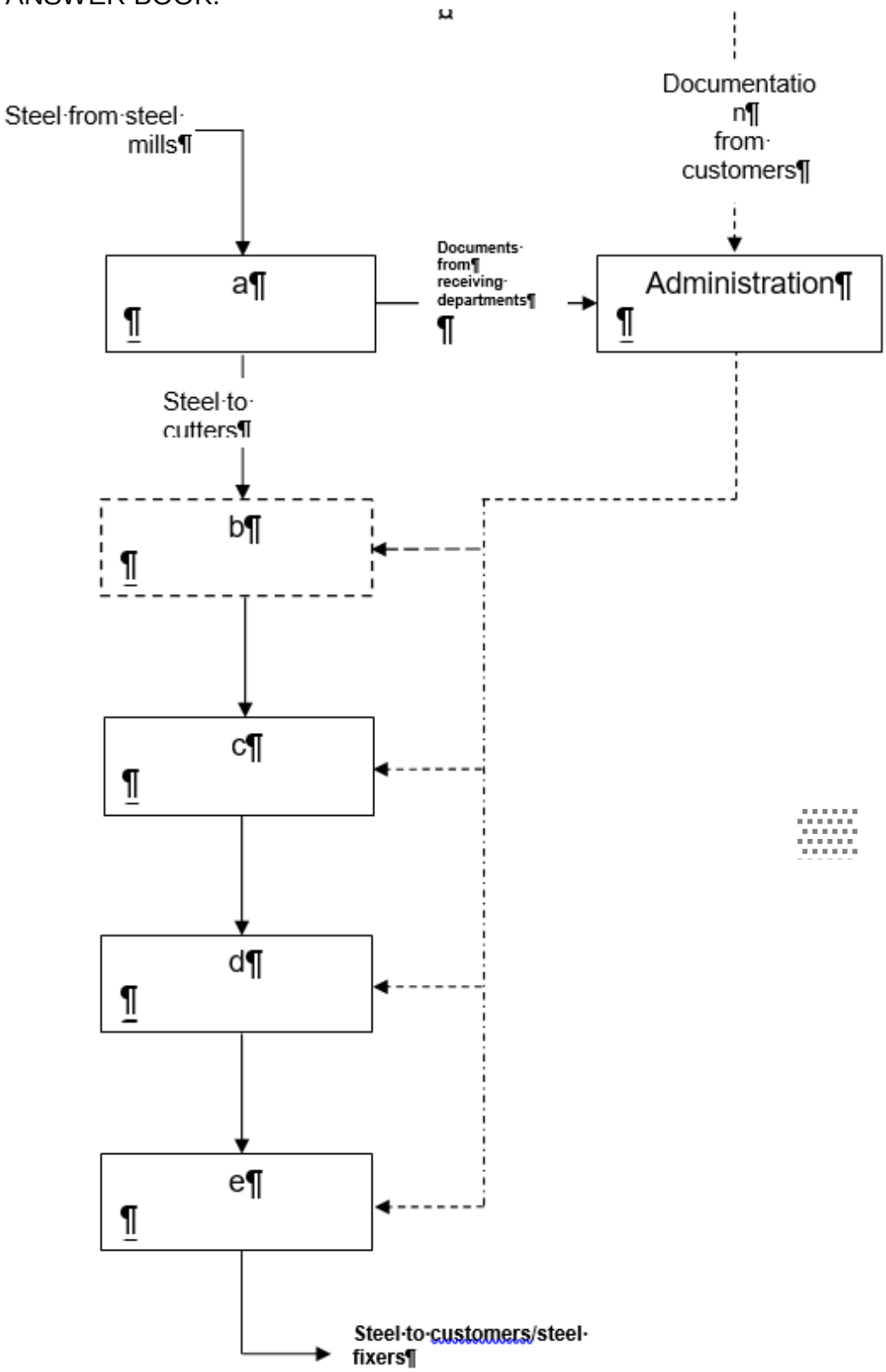

(5)

4.5 Differentiate between a *lap* and *splice*. (2)

[25]

TOTAL 100

Copyright reserved

ADDENDUM A

SABS 82 SHAPE CODE

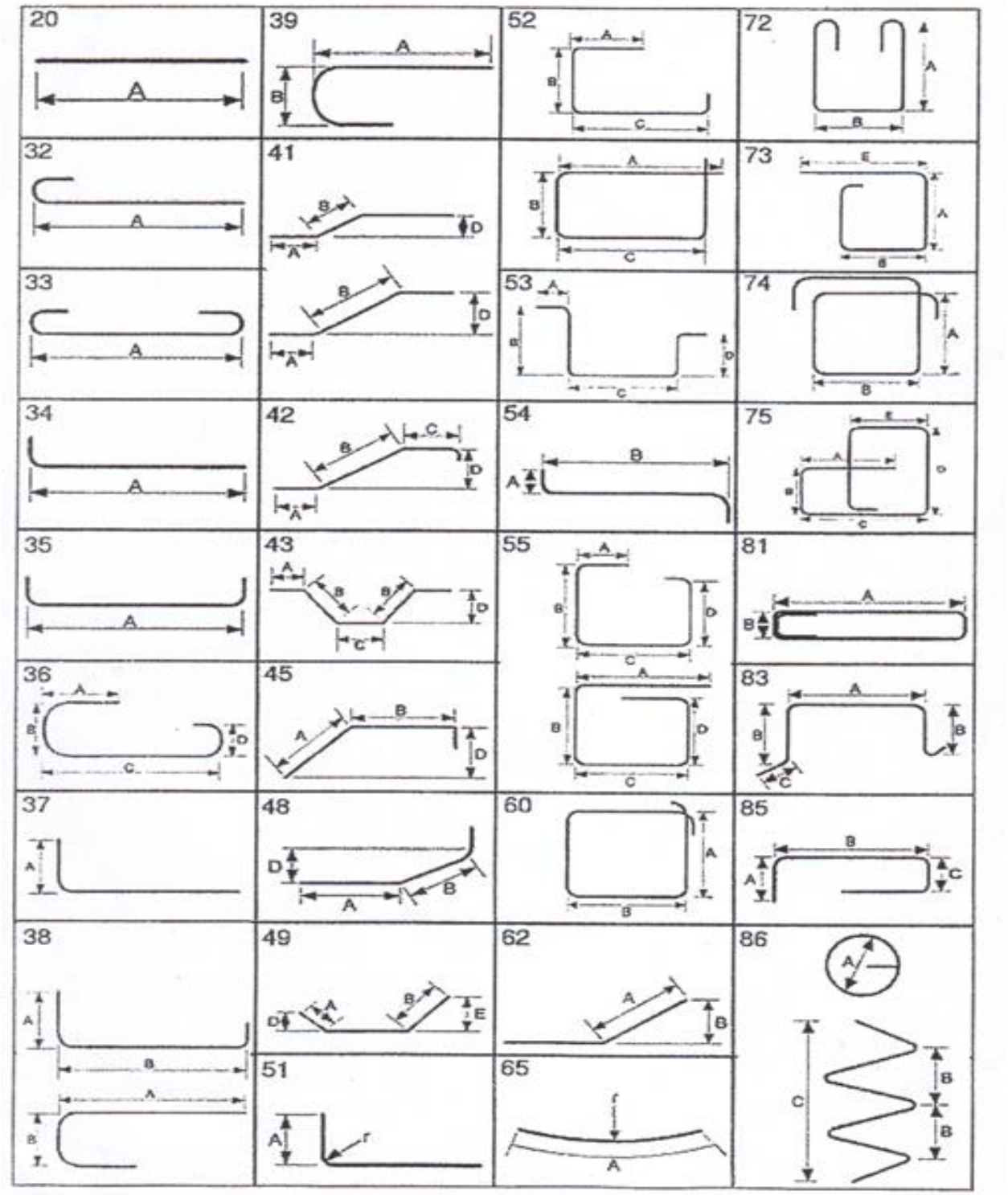

Copyright reserved

ADDENDUM B **EXAMINATION NUMBER:** | | | | | | | | | | | | | |

QUESTION 3.2

A	B	C	D	E	F	G	H			
Member							Bending dimensions			
	Bars per member	Total bars	Type/ diameter	Bar mark	Shape code	Total length	A	B	C	D
					42		150	300	100	120

FIGURE 2 (6)

Copyright reserved