higher education & training

Department:
Higher Education and Training
REPUBLIC OF SOUTH AFRICA

NATIONAL CERTIFICATE (VOCATIONAL)

MANUAL MANUFACTURING
NQF LEVEL 2

(6090032)

20 November 2024 (Y-paper)
13:00–16:00

This question paper consists of 8 pages.

319Q1N2420

Copyright reserved

DEPARTMENT OF HIGHER EDUCATION AND TRAINING
REPUBLIC OF SOUTH AFRICA

NATIONAL CERTIFICATE (VOCATIONAL)
MANUAL MANUFACTURING
NQF LEVEL 2
TIME: 3 HOURS
MARKS: 100

INSTRUCTIONS AND INFORMATION

1. Answer all the questions.
2. Read all the questions carefully.
3. Number the answers according to the numbering system used in this question paper.
4. Use only a black or blue pen.
5. Write neatly and legibly.

Copyright reserved

QUESTION 1

1.1 Various options are given as possible answers to the following questions. Choose the correct answer and write only the letter (A–D) next to the question number (1.1.1–1.1.4) in the ANSWER BOOK.

1.1.1 Safety is important in a workplace, because …

A it can prevent accidents.
B it makes the employee work faster.
C it helps in writing an incident report.
D it helps with housekeeping.

1.1.2 If all the workers work safely, …

A there will be too much noise in the factory.
B it will improve the productivity of the company.
C NOSA will not have to audit the company for health and safety.
D there will not be so much absenteeism in the company.

1.1.3 An example of a safety hazard is…

A contact with moving parts.
B exposure to excessive noise.
C inhaling dangerous chemicals.
D keeping your body away from radiation.

1.1.4 An example of a health hazard is …

A an unsafe act.
B contact with electricity.
C contact with moving parts.
D breathing in dangerous chemicals.

(4 × 1) (4)

1.2 Choose a term from COLUMN B that matches a description in COLUMN A. Write only the letter (A–D) next to the question number (1.2.1–1.2.4) in the ANSWER BOOK.

COLUMN A		COLUMN B	
1.2.1	Class A	A	Class D
1.2.2	Burning of magnesium and aluminium	B	Burning of wood or paper
1.2.3	Class B	C	Class C
1.2.4	Burning takes place due to an electrical problem	D	Burning of petrol or paraffin

(4 × 1) (4)

1.3 NOSA will grade a workplace and award a star rating, based on its level of compliance.

How does a workplace achieve NOSCAR status? (3)

1.4 To work safely in a workshop, it is important to follow basic rules.

Name FOUR rules that should be observed when working in a workshop. (4)
[15]

QUESTION 2

2.1 Show, with the aid of a sketch, the difference between a *centre line* and a *hidden line.* (2)

2.2 Carefully study the drawing equipment shown in FIGURE 1 below.

Name each drawing apparatus. Write only the answer next to the question number (2.2.1–2.2.4) in the ANSWER BOOK. (4)

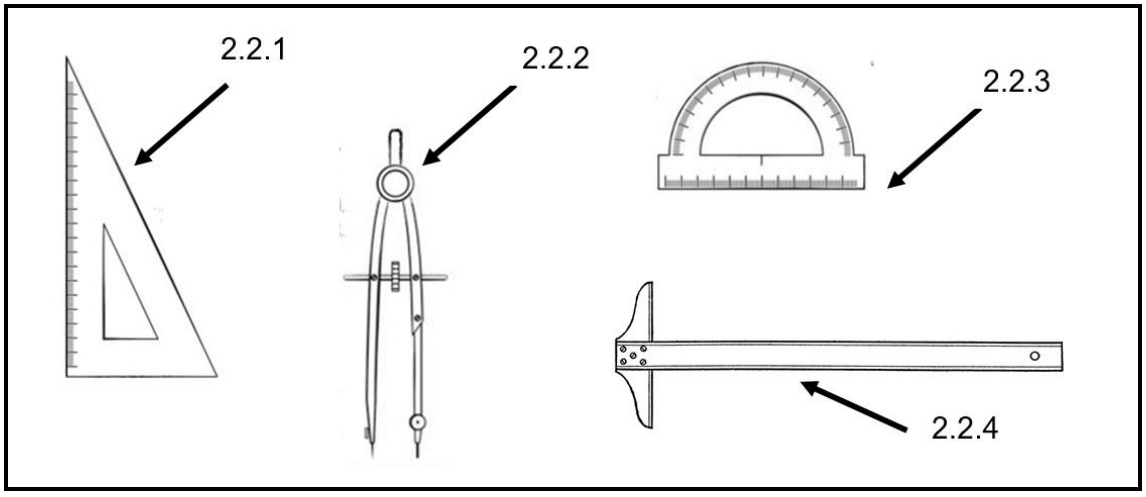

FIGURE 1

2.3 A scale is normally given for a drawing. For example, 1:1, which means the drawing size is the same as the actual size of the part.

What does it mean if a drawing has the following scale?

2.3.1 Scale of 1:2

2.3.2 Scale of 2:1

(2 × 2) (4)
[10]

QUESTION 3

3.1 Indicate whether the following statements are TRUE or FALSE by writing only 'True' or 'False' next to the question number (3.1.1–3.1.5) in the ANSWER BOOK.

3.1.1 The face of measuring tools has to be free from dust and dirt, to avoid measuring errors.

3.1.2 A micrometre does not need to be put in a special casing after use.

3.1.3 Vernier callipers can be used for scribing on metal.

3.1.4 For accurate measurement, it is good practice to make sure the work piece is cleaned first.

3.1.5 When measuring is done on rotating shafts, it could be dangerous and can damage the face of the measuring tool.

(5 × 1) (5)

3.2 Vernier callipers can be used for measuring different applications.

Name FOUR things that can be measured. (4)

3.3 A centre punch is used for the purpose of marking off. There are two types that are commonly used.

Draw these TWO punches and show the different angle, in degrees, of each one. (4)

3.4 Carefully study the micrometre reading in FIGURE 2.

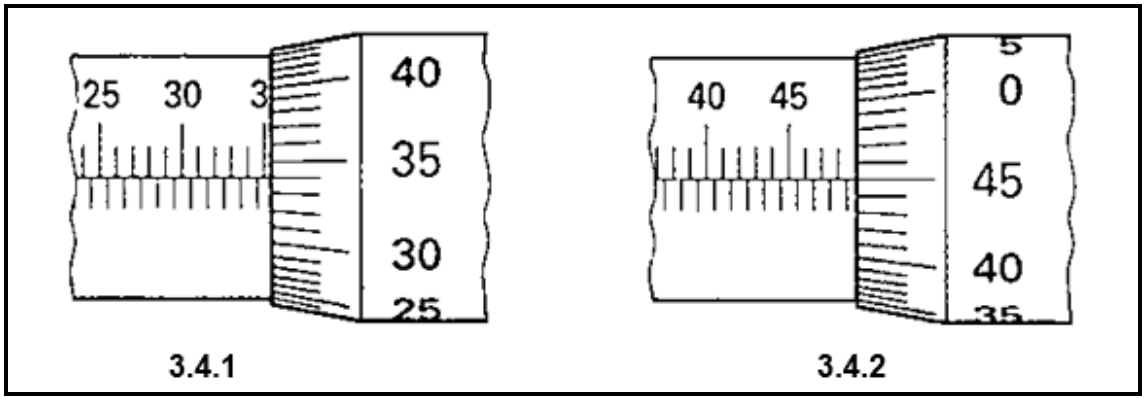

FIGURE 2

At what measurement is the micrometre set? Write the answer next to the question number (3.4.1–3.4.2) in the ANSWER BOOK. (2 × 2) (4)

3.5 A micrometre is a tool that can measure very accurately.

Give TWO pointers on how to take care of a micrometre. (2)

3.6 A hacksaw blade became blunt too soon.

Give TWO reasons why this could have happened. (3)

3.7 Make a neat drawing of a ball-peen hammer head. (3)

[25]

QUESTION 4

4.1 Choose a term from COLUMN B that matches a description in COLUMN A. Write only the letter (A–D) next to the question number (4.1.1–4.1.4) in the ANSWER BOOK.

COLUMN A		COLUMN B	
4.1.1	ARC welding	A	uses argon gas to cool down the weld puddle
4.1.2	MIG welding	B	is done by using acetylene as a fuel
4.1.3	TIG welding	C	is done by using a welding rod that fits in an electrode holder
4.1.4	GAS welding	D	uses a continuous welding rod that get activated from a welding gun

(4 × 1) (4)

4.2 Carefully study the different flames in FIGURE 3, below, that has to be set for gas welding.

Name the different flames. Write the answer next to the question number (4.2.1–4.2.3) in the ANSWER BOOK.

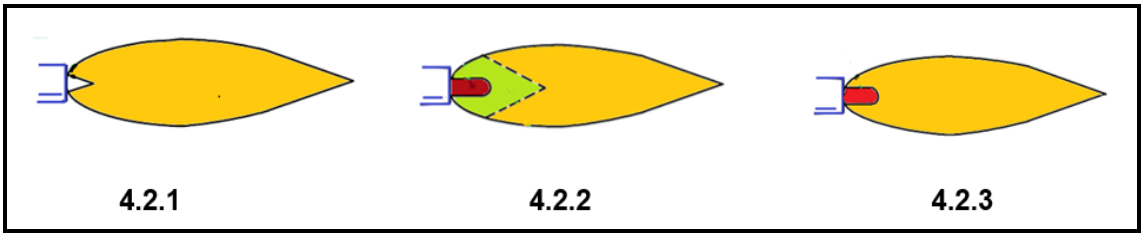

FIGURE 3

(3 × 2) (6)

4.3 Name FOUR personal protective clothing that is needed when someone is using a gas cutting torch. (4)

4.4 Make a neat drawing that shows the following symbols:

4.4.1 A fillet weld on both sides.

4.4.2 A fillet weld on one side.

4.4.3 A vee weld on both sides.

4.4.4 A bevel weld on both sides.

(4 × 2) (8)

4.5 Indicate whether the following statements are TRUE or FALSE by writing only 'True' or 'False' next to the question number (4.5.1–4.5.5) in the ANSWER BOOK.

4.5.1 Welding gloves are made of wool.

4.5.2 Soldering is a process of joining 2 metals together.

4.5.3 Flux is only available in solid form.

4.5.4 In an emergency, sunglasses can be used, instead of welding goggles.

4.5.5 Solder consists of lead and zinc.

(5 × 1) (5)

4.6 You have just fitted a new point onto your soldering gun.

Explain how you would go about tinning this point. (3)

[30]

QUESTION 5

5.1 Poor housekeeping can cause an accident.

Name FOUR accidents that can occur due to poor housekeeping. (4)

5.2 NOSA is very particular about how the colour of a floor plan should be painted.

What colour should be used for the following.

5.2.1 Stacking space

5.2.2 Entrances and obstructions

5.2.3 Refuse bins

(3 × 1) (3)

5.3 Show, with the aid of a sketch, the difference between the following symbolic safety signs.

The sketch must show the shape and you must label what colour the area of the sign should be.

5.3.1 Caution sign

5.3.2 Prohibition sign

5.3.3 Mandatory

(3 × 2) (6)

5.4 Why would a project plan sheet be beneficial when a project has to be manufactured? (4)

5.5 Copper is a non-ferrous metal.

Name THREE properties of copper. (3)

[20]

TOTAL: 100

Copyright reserved