higher education & training

Department:
Higher Education and Training
REPUBLIC OF SOUTH AFRICA

NATIONAL CERTIFICATE (VOCATIONAL)

FARMING PLANNING AND MECHANISATION
NQF LEVEL 4

(1011044)

20 November 2024 (X-paper)
09:00–12:00

This question paper consists of 10 pages.

305Q1N2420

Copyright reserved

DEPARTMENT OF HIGHER EDUCATION AND TRAINING
REPUBLIC OF SOUTH AFRICA

NATIONAL CERTIFICATE (VOCATIONAL)
FARM PLANNING AND MECHANISATION
NQF LEVEL 4
TIME: 3 HOURS
MARKS: 150

INSTRUCTIONS AND INFORMATION

1. Answer all the questions.
2. Read all the questions carefully.
3. Number the answers according to the numbering system used in this question paper.
4. Start each section on a new page.
5. Use only a black or blue pen.
6. Write neatly and legibly.

Copyright reserved

SECTION A

QUESTION 1

1.1 Various options are given as possible answers to the following questions. Choose the answer and write only the letter (A–D) next to the question number (1.1.1–1.1.10) in the ANSWER BOOK

1.1.1 A compound that speeds up chemical reactions in the body of a living organism.

A Enzyme
B Energy
C Lipids
D Bacteria

1.1.2 The temperature on earth varies according to …

A the height above earth level.
B seasonal differences.
C the distance from the sun.
D the angle of the slope.

1.1.3 The group of organic compounds containing carbon, oxygen, nitrogen and sometimes sulphur and phosphorus:

A Lipids
B Glycogen
C Protein
D Insulin

1.1.4 A degree to which land or soil can be able to retain water:

A Water holding capacity
B Drainage
C Saturation
D Infiltration

1.1.5 A process where water escapes from the surface of the soil as well as from the leaves of plants.

A Evaporation
B Transpiration
C Evapotranspiration
D Humidity

Copyright reserved

1.1.6 The type of soil mostly found where low rainfall occurs is usually said to be …

A alkaline.
B clay.
C acidic.
D sandy.

1.1.7 The form in which nutrient full materials must be broken down to be absorbed by plants.

A Humus
B Ionic
C Inorganic to organic
D Ironic

1.1.8 The infiltration rate is known to be very high in soil with …

A fine texture.
B coarse texture.
C micro pores.
D silty texture.

1.1.9 The state of the soil when water stops to drain out after raining or irrigation is called …

A water holding capacity.
B water capacity.
C field capacity.
D infiltration.

1.1.10 The pores in the soil that always open first after rain or irrigation:

A Macro pores
B Micro pores
C Middle pores
D None of the above

(10 × 1) (10)

Copyright reserved

1.2 Choose a term from COLUMN B that matches a description in COLUMN A. Write only the letter (A–N) next to the question number (1.2.1–1.2.10) in the ANSWER BOOK.

COLUMN A		COLUMN B	
1.2.1	The form of water found in soil particles and used by plants	A	carrying capacity
1.2.2	The relationship that occurs between plants and animals in an environment	B	climax community
1.2.3	A degree where veld can accommodate animals at certain numbers	C	rationing of inputs
1.2.4	A community of plants that can limit the introduction of other species	D	pathogens
1.2.5	Micro-organisms that are known to cause diseases	E	South Africa
1.2.6	The production of produce on a land	F	moisture
1.2.7	This country is part of BRICS	G	ceiling of succession
1.2.8	The function of a co-op in the farming industry	H	biotic community
1.2.9	Someone can be able to recognise an opportunity and be able to use it by starting a business	I	finance new projects
1.2.10	A practice where less than the optimum quantity is used	J	South Korea
		K	primary agriculture
		L	entrepreneur
		M	organise legal representative for farmers
		N	diversification in production

(10 × 1) (10)

1.3 Indicate whether the following statements are TRUE or FALSE by writing only 'True' or 'False' next to the question number (1.3.1–1.3.10) in the ANSWER BOOK.

1.3.1 One of the functions of a farmers' association is to manage the marketing of the farmers' produce.

1.3.2 The socio-economic factors that influence the success of an agricultural enterprise is marketing and distribution.

1.3.3 Farmers associations are also involved in buying equipment for farmers.

1.3.4 The money the bank gives a farmer is called credit.

1.3.5 A practice where minimal tillage or minimum soil cultivation is used for planting, is also called no-tilling or zero soil cultivation.

1.3.6 The type of credit used to pay or buy livestock is called fixed term capital.

1.3.7 Financial aid given by the state to citizens is referred to as a grant.

1.3.8 The type of tax that is added onto the price of imported goods is called income tax.

1.3.9 Agricultural production and marketing were deregulated in 1996 as part of the Marketing of Agricultural Product Act of 1996.

1.3.10 The law of 'supply and demand' states that when the quantity demand is high the quantity supply will also be higher.

(10 × 1) (10)

1.4 Give ONE word/term for the following descriptions. Write only the word/term next to the question number (1.4.1–1.4.10) in the ANSWER BOOK.

1.4.1 A piece of property to which the owner has a legal title deed or that the owner leases.

1.4.2 The type of veld found where rainfall is low.

1.4.3 A land where only fruit are grown on a piece of land.

1.4.4 A passage-like structure which has been fenced with sliding poles at the front and at the back to handle animals.

1.4.5 Unwanted plants that grow on land of cultivated crops.

1.4.6 A chemical that is used to control insect pests on the field of crops.

1.4.7 The type of insects that feed on pests that infect crops and are seen as farmer friendly.

1.4.8 Crops that are solely grown to be ploughed back to improve the soil.

1.4.9 An irrigation system that applies water directly to the root area of crops in the form of droplets.

1.4.10 A marketing system where fruits and vegetables are sold inside the farm.

(10 × 1) (10)
[40]

QUESTION 2

2.1 Explain the following terminologies:

2.1.1 Monoculture

2.1.2 Pasturage

2.1.3 Catchment area

(3 × 2) (6)

2.2 Explain why farmers in some areas have no choice but to continue practicing monoculture. (4)

2.3 Give FOUR characteristics of soil that is suitable for irrigation schemes. (4)

Copyright reserved

2.4 Farming can also be done where irrigation water is not available, but there are some important considerations.

Briefly discuss THREE factors that should be considered when a farmer wants to plant on dryland areas. (6)
[20]

QUESTION 3

3.1 Planning for farm buildings should be done with great care.

Name FOUR factors to consider when planning for farm buildings. (4)

3.2 An animal farmer may have structures and facilities that are not like those of crop farmers. Explain why an animal farmer will need the following structures in his/her farm:

3.2.1 Cattle dip

3.2.2 Spray race

(2 × 2) (4)

3.3 The production potential of each field is not the same. Therefore, a farmer needs to make effective assessments.

Discuss the assessments that need to be conducted on the land before farming can be practiced. (6)

3.4 Explain the concept *mixed farming*. (4)

3.5 Large areas of South Africa consist of dry land crop farming, with little annual rainfall. (4)

List FOUR best practises that will allow farmers to be able to produce crops in these dry circumstances.

3.6 Differentiate between the following:

3.6.1 Browser and broiler

3.6.2 Rumen and ruminant

(2 × 2) (4)

3.7 The transport and roads become a big concern to farmers when it comes to market costs.

Explain why the route to the market is so important to a farmer. (4)
[30]

TOTAL SECTION A: 90

Copyright reserved

SECTION B

QUESTION 4

4.1 Animals have been used as a source of power for the last six thousand years.

Name FIVE ways in which animals can serve as a source of power. (5)

4.2 List FOUR crop production potential levels in South Africa. (4)

4.3 List FIVE South African Acts that apply to worker's rights. (5)

4.4 Give TWO examples of inefficient use of animals as a source of power. (2)

4.5 Explain how the examples given in QUESTION 4.4 can lead to an inefficient use of an animal's power. (4)

[20]

QUESTION 5

5.1 Explain the construction of the following types of tractors to show your understanding of their differences.

5.1.1 Wheeled-model tractor

5.1.2 Tracked-model tractor

5.1.3 Front-end loader

5.1.4 Back-end loader

(4 × 2) (8)

5.2 State in which engine-stroke the following takes place in a four-stroke combustion engine:

5.2.1 Where the injectors inject fuel to be ignited by the high temperatures above the piston.

5.2.2 Air is pulled into the combustion chamber.

5.2.3 The outlet valve is opened to release burnt gases out of the engine.

5.2.4 Both valves are closed and the piston moving towards the top of the cylinder.

(4 × 1) (4)

5.3 Name TWO types of air filters in a tractor. (2)

5.4 Explain the functions of the air filters mentioned in QUESTION 5.3 above. (4)

5.5 What is the function of a PTO (power take off) shaft in a tractor? (2)

[20]

Copyright reserved

QUESTION 6

6.1 Study the diagram of a tractor's cooling system below and answer the questions that follow.

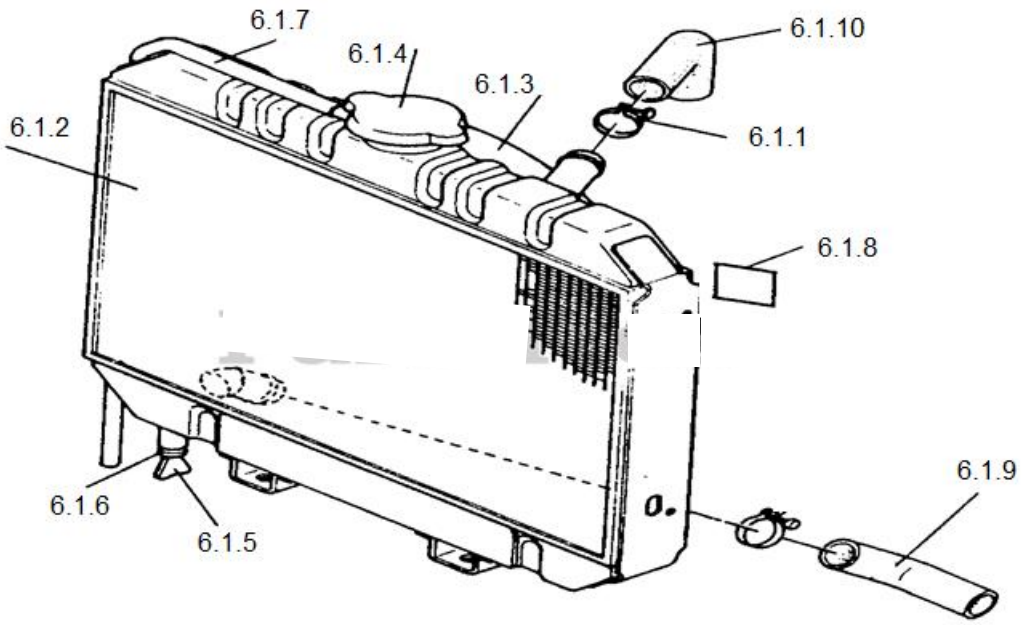

FIGURE 1

[Source: *https://images.google.com*]

6.1.1 Give the name of the object in FIGURE 1. (1)

6.1.2 Label the diagram in FIGURE 1 by writing only the word or words next to the question number (6.1.1–6.1.10) in the ANSWER BOOK. (10)

6.1.3 State the function of the part labelled number 6.1.5. (2)

6.2 Tractors fitted with a three-point hydraulic system are made up of linkages.

Give the names of each of these three-point linkage parts. (3)

6.3 Explain the function of the three-point hydraulic linkage system in a tractor. (4)

[20]

TOTAL SECTION B: 60
GRAND TOTAL: 150

Copyright reserved