higher education & training

Department:
Higher Education and Training
REPUBLIC OF SOUTH AFRICA

NATIONAL CERTIFICATE (VOCATIONAL)

ELECTRICAL WORKMANSHIP
NQF LEVEL 4

(12041014)

20 November 2024 (X-paper)
09:00–12:00

Calculators and drawing instruments may be used.

This question paper consists of 8 pages.

301Q1N2420

Copyright reserved

DEPARTMENT OF HIGHER EDUCATION AND TRAINING
REPUBLIC OF SOUTH AFRICA

NATIONAL CERTIFICATE (VOCATIONAL)
ELECTRICAL WORKMANSHIP
NQF LEVEL 4
TIME: 3 HOURS
MARKS: 100

INSTRUCTIONS AND INFORMATION

1. Answer all the questions.
2. Read all the questions carefully.
3. Number the answers according to the numbering system used in this question paper.
4. Round off all calculations to two decimal places.
5. Use only a black or blue pen.
6. Freehand drawings will NOT be allowed. The correct drawing instruments must be used and a pencil may be used.
7. Write neatly and legibly.

Copyright reserved

QUESTION 1

1.1 Working in the electrical industry exposes electricians to many dangers. Complete the following sentences by writing only the missing word or words next to the question number (1.1.1–1.1.5) in the ANSWER BOOK.

1.1.1 Electric shock can occur when using tools that are not properly ...

1.1.2 The extent of electrical injury to the human body depends on the amount of … flowing through the body.

1.1.3 A current of … can cause respiratory paralysis.

1.1.4 Electric shock can cause … in the brain or other vital organs.

1.1.5 An electrical fire can be caused by the … of electrical equipment or components.

(5 × 1) (5)

1.2 Safe work practices are very important when working on machinery and electrical equipment.

1.2.1 Name TWO consequences that could occur when lockout procedures are not used.

1.2.2 State TWO basic safety rules when working with a bench grinder.

(2 × 2) (4)

1.3 There are many hazards to be aware of when working on or operating machinery.

State FOUR hazards associated with machinery. (4)

1.4 Indicate whether the following statements are TRUE or FALSE by writing only 'True' or 'False' next to the question number (1.4.1–1.4.4) in the ANSWER BOOK.

1.4.1 Employers are not responsible for visitors entering the workplace.

1.4.2 Medium priority hazards must be repaired or rectified immediately.

1.4.3 Be aware that a very likely risk factor can occur immediately or very soon.

1.4.4 Regular risk assessments create awareness of hazards and risks.

(4 × 1) (4)

1.5 The hierarchy of controls is the system used in industry to minimise or eliminate hazards.

State THREE administrative controls that will reduce the level of risk. (3)

[20]

QUESTION 2

2.1 Carefully study the circuit diagram below and name the components indicated by writing only the answer next to question number (2.1.1–2.1.5) in the ANSWER BOOK.

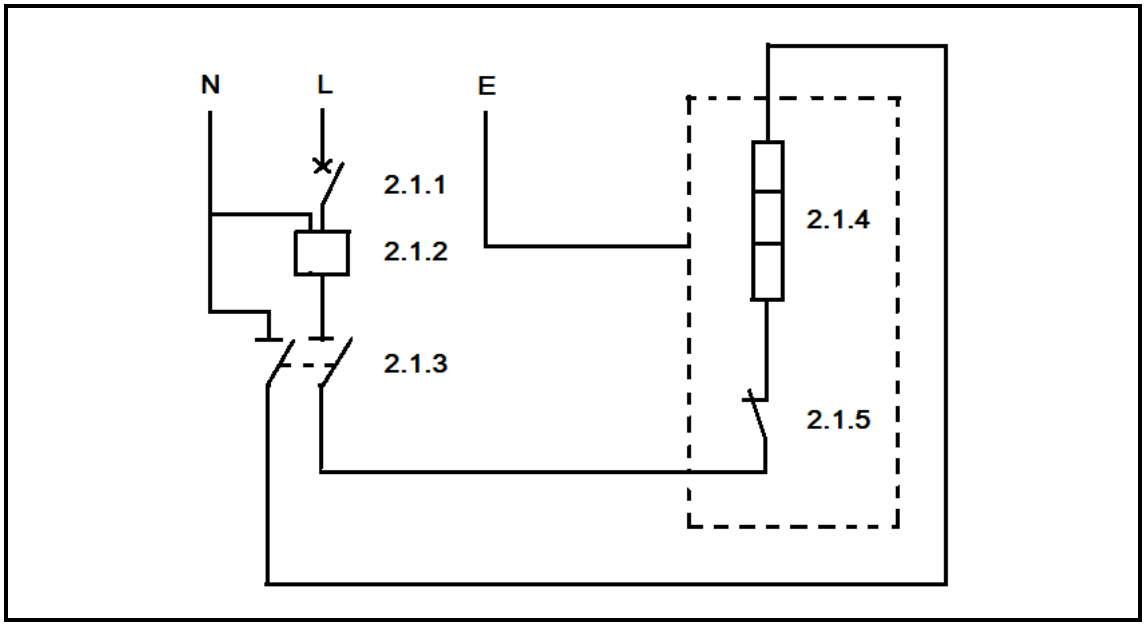

(5 × 1) (5)

2.2 Basic circuits use symbols to represent all the circuit components.

Name the FOUR components required in a basic circuit. (4)

2.3 Draw the fully labelled circuit diagram of a basic relay with one change-over contact. (4 × 1) (4)

2.4 Determine the maximum time that a 30 mm^2 copper PVC insulated cable can withstand a fault current of 2,5 kA.

HINT: $Sp\frac{\sqrt{(I^2\times t)}}{k}$ **OR** $Ifc = \frac{CIF \times A}{\sqrt{t}}$

Refer to the table below for the necessary information:

TYPE OF INSULATION	TYPE OF CONDUCTOR	K OR CIF
PVC	copper	96
PVC	aluminium	62
PVC	steel	52
XLPE	copper	176
XLPE	aluminium	116
XLPE	steel	64
butyl rubber	copper	166
butyl rubber	aluminium	110
butyl rubber	steel	60

(5 × 1) (5)

Copyright reserved

2.5 State TWO consequences of a short-circuit current in an electrical installation. (2 × 1) (2)

[20]

QUESTION 3

3.1 Explain the following lighting terms:

3.1.1 Luminous flux (F)

3.1.2 Luminance (L)

(2 × 1) (2)

3.2 Draw a labelled diagram to show how semi-direct lighting is reflected in a room or building. (4 × 1) (4)

3.3 Choose an item from COLUMN B that matches a description in COLUMN A. Write only the letter (A–E) next to the question number (3.3.1–3.3.4) in the ANSWER BOOK.

COLUMN A		COLUMN B	
3.3.1	Provide a uniform distribution of light in a large area	A	light quality
3.3.2	The illumination must not be harmful to people	B	general lighting
3.3.3	A lamp that produces electric current through a vapour or gas	C	discharge lamp
3.3.4	Lighting systems using luminaires, shades and reflectors which reflect light in all directions	D	good lighting
		E	indirect lighting

(4 × 1) (4)

Copyright reserved

3.4 Refer to the diagram below and name THREE types of lamps in any order next to the question numbers (3.4.1–3.4.3) in the ANSWER BOOK.

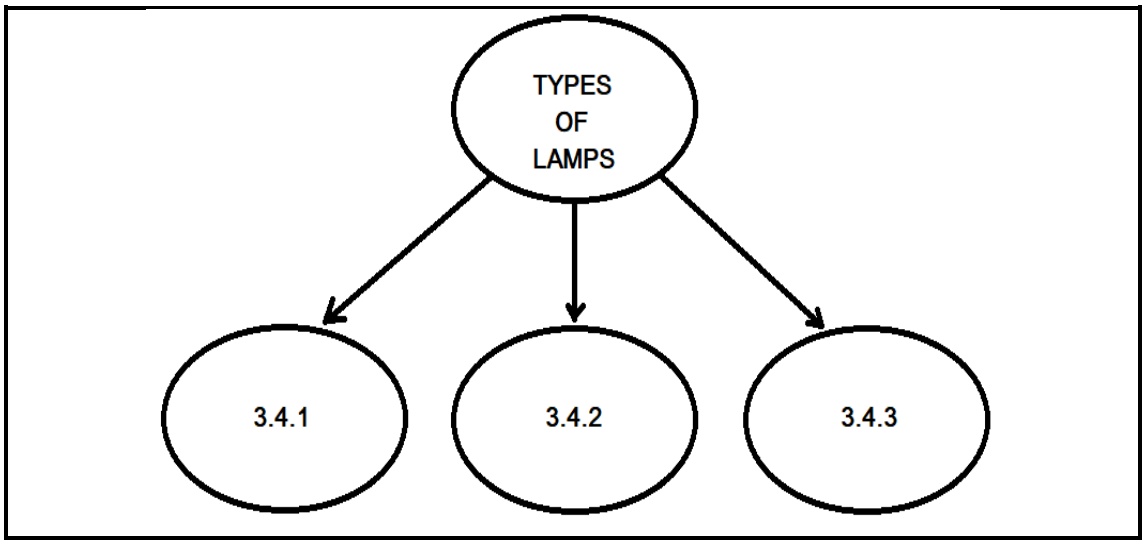

(3 × 1) (3)

3.5 All the types of lamps have advantages and disadvantages.

3.5.1 State TWO advantages of incandescent lamps.

3.5.2 State TWO disadvantages of fluorescent tubes.

(2 × 2) (4)

3.6 TWO connection methods are used to connect fluorescent lamps.

3.6.1 Name the effect that makes it necessary to use these methods when connecting fluorescent lamps. (1)

3.6.2 Explain any ONE of the methods referred to in QUESTION 3.6.1. (2)

[20]

QUESTION 4

4.1 Electricians apply a variety of methods or techniques when repairing faulty appliances and power tools.

Name FOUR measurement tests that must be done. (4)

4.2 A kettle has been handed in at your workshop for repairs. Once the kettle has been tested, the element was found to be faulty.

4.2.1 Draw the fully labelled basic kettle circuit diagram. (5 × 1) (5)

4.2.2 Draw only the element symbol from the circuit diagram that you have drawn in QUESTION 4.2.1 showing how you would test the faulty kettle element with a test instrument. (2 × 1) (2)

4.3 Choose a possible cause from COLUMN B for each fault in COLUMN A. Write only the letter (A–E) next to the question number (4.3.1–4.3.4) in the ANSWER BOOK.

COLUMN A FAULTY POWER TOOLS		COLUMN B POSSIBLE CAUSES	
4.3.1	The power tool does not switch on	A	faulty armature
4.3.2	The power tool motor overheats	B	worn gearbox
4.3.3	The power tool motor turns slowly	C	faulty element
4.3.4	The power tool motor is noisy	D	short-circuited motor
		E	faulty electronic control module

(4 × 1) (4)

4.4 A power tool control module or switch was found to be faulty after it was tested. Describe step-by-step a basic method to replace this component. (5)

[20]

QUESTION 5

5.1 State TWO checks that must be done when planning an installation of electrical machines. (2 × 1) (2)

5.2 Study the circuit diagram in FIGURE 1 below and answer the questions that follow.

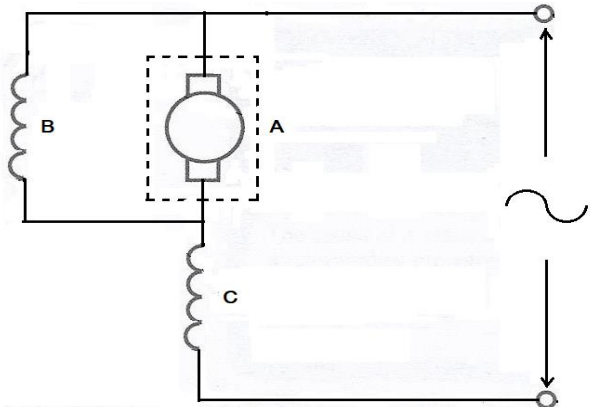

FIGURE 1

5.2.1 Name the circuit diagram in FIGURE 1. (1)

5.2.2 Redraw the circuit diagram above showing how you would connect it in the reverse rotational direction by only changing the connections marked within the dotted lines. Label the components (A–C) on the circuit diagram. (4 × 1) (4)

5.2.3 Explain how you would test or measure the motor supply voltage on the circuit diagram that you have drawn for QUESTION 5.2.2. (2 × 1) (2)

5.3 The regular maintenance of electrical machines and switch gear will keep the equipment in good operational condition.

State THREE things that must be done before disassembling an electrical motor. (3 × 1) (3)

5.4 Commissioning motor tests must be done before and after a motor is installed.

Name FOUR tests that must be done on a single-phase capacitor-start induction-run motor. (4 × 1) (4)

5.5 Give a brief description or explanation of how to replace the bearings of an electric motor. (4 × 1) (4)

[20]

TOTAL: 100

Copyright reserved