higher education & training

Department:
Higher Education and Training
REPUBLIC OF SOUTH AFRICA

NATIONAL CERTIFICATE (VOCATIONAL)

MACHINE MANUFACTURING
NQF LEVEL 3

(6030203)

19 November 2024 (X-paper)
09:00–12:00

This question paper consists of 10 pages.

265Q1N2419

Copyright reserved

DEPARTMENT OF HIGHER EDUCATION AND TRAINING
REPUBLIC OF SOUTH AFRICA

NATIONAL CERTIFICATE (VOCATIONAL)
MACHINE MANUFACTURING
NQF LEVEL 3
TIME: 3 HOURS
MARKS: 100

INSTRUCTIONS AND INFORMATION

1. Answer all the questions.
2. Read all the questions carefully.
3. Number the answers according to the numbering system used in this question paper.
4. Use only a black or blue pen.
5. Write neatly and legibly.

Copyright reserved

QUESTION 1

1.1 Various options are given as possible answers to the following questions. Choose the answer and write only the letter (A–D) next to the question number (1.1.1–1.1.4) in the ANSWER BOOK.

1.1.1 Machine safety is important because …

A it helps with housekeeping.
B it makes the employee work faster.
C it can prevent accidents.
D it helps in writing an accident report.

1.1.2 An unsafe act is caused by …

A not cleaning the machine properly.
B working with loose clothing on a lathe.
C too much noise in the factory.
D a burst pipe on a lathe that is spilling coolant on the floor.

1.1.3 A guard that is activated by a light beam is called a …

A fixed guard.
B trip guard.
C automatic guard.
D distance guard.

1.1.4 Leaning over a machine would be a/an …

A unsafe act.
B unsafe condition.
C unregulated machine.
D good way of cleaning the machine.

(4 × 1) (4)

1.2 Study the lathe shown in FIGURE 1 below. Identify the safety features by writing only the answer next to the number (1.2.1–1.2.4) in the ANSWER BOOK. (4)

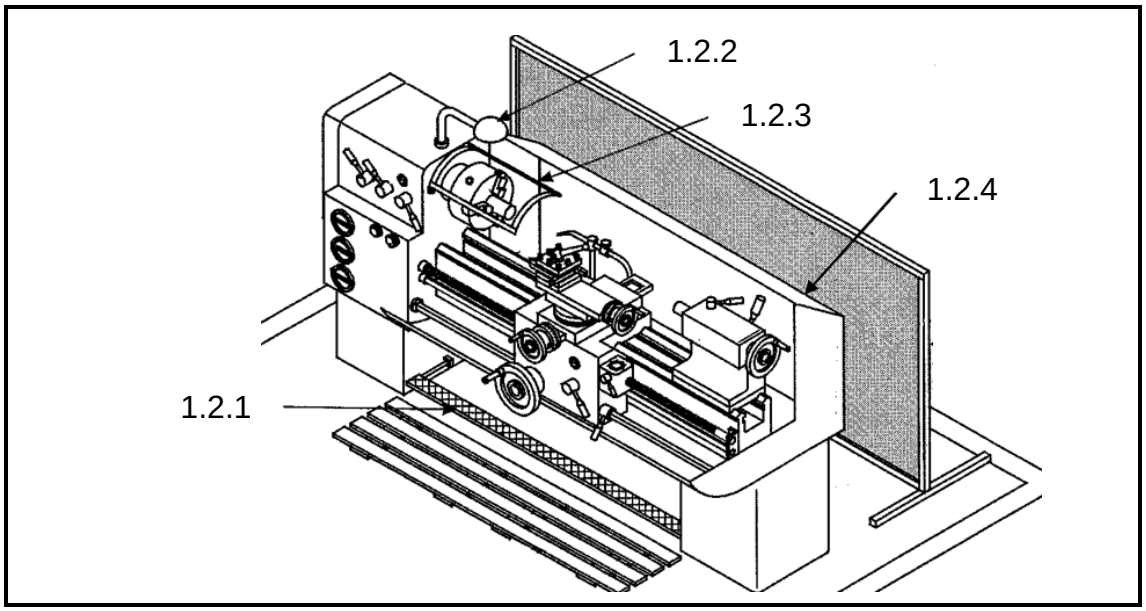

FIGURE 1

1.3 Accidents do not happen; they are caused.

Name FIVE simple rules that one may follow to prevent accidents from happening in a workshop. (5)

1.4 A lathe machine is constantly spraying cooling fluid onto the floor.

Recommend TWO precautionary measures that can be taken to prevent an accident in this scenario. (2)
[15]

QUESTION 2

2.1 Companies should use the ISO system to be globally competitive.

State what the abbreviation *ISO* stand for and explain the function of the ISO in the manufacturing industry. (4)

2.2 Indicate whether the following statements are TRUE or FALSE by writing only 'True' or 'False' next to the question number (2.2.1–2.2.6) in the ANSWER BOOK.

2.2.1 The size ($50^{+0,02}_{-0,01}$) is given for a shaft. The upper limit is 50,01.

2.2.2 The size ($30^{-0,02}_{-0,03}$) is given for a shaft. The lower limit is 30,03.

2.2.3 The size ($30^{-0,02}_{-0,03}$) is given for a shaft. The tolerance is 0,05.

2.2.4 The size ($50^{+0,02}_{-0,01}$) is given for a shaft. The lower deviation is 0,01.

2.2.5 The size ($30^{-0,02}_{-0,03}$) is given for a shaft. The basic size is 29,97.

2.2.6 The size ($50^{+0,02}_{-0,01}$) is given for a shaft. The upper deviation is 50,01.

(6 × 1) (6)

2.3 Draw the following machining symbols:

2.3.1 Flame-hardened

2.3.2 Case-hardened

(2 × 1) (2)

2.4 Machine symbols are used on drawings so that the artisan knows what machining must be done.

Draw the following machine symbols:

2.4.1 Spot facing

2.4.2 Reaming

2.4.3 Chamfering

(3 × 1) (3)

[15]

QUESTION 3

3.1 Four operations that can be done on a drilling machine are indicated in FIGURE 2 below.

Identify these FOUR operations. Write only the answer next to the number (3.1.1–3.1.4) in the ANSWER BOOK. (4)

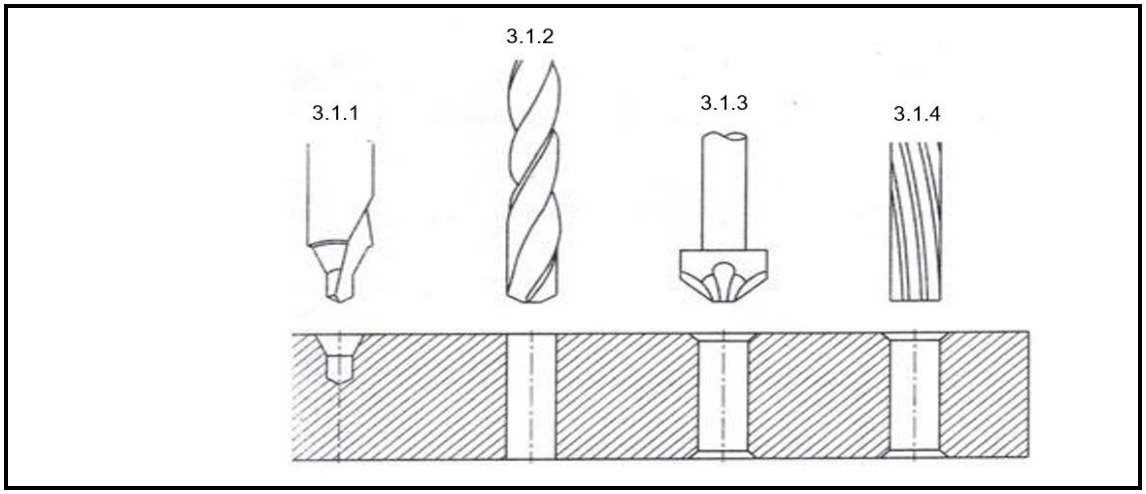

FIGURE 2

3.2 Show with the aid of a sketch the difference between the appearance of a *taper shank drill* and a *parallel shank drill.* (4)

3.3 A flange has to be made in the machine shop. The flange must have five holes.

Calculate at what rpm the drilling machine must be set. The diameter of the drill bit is 10 mm and the cutting speed is 70 m/min. (5)

3.4 Indicate whether the following statements are TRUE or FALSE by writing only 'True' or 'False' next to the question number (3.4.1–3.4.2) in the ANSWER BOOK.

3.4.1 The following sketch shows an illustration of up-milling:

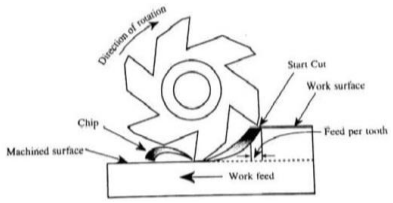

3.4.2 The following sketch shows an illustration of down-milling:

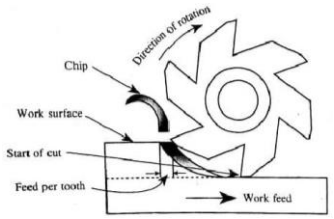

(2 × 1) (2)
[15]

QUESTION 4

4.1 FIGURE 3 below shows different centre lathe tip tools. Label the tip tools by writing only the answer next to the number (4.1.1–4.1.5) in the ANSWER BOOK. (5)

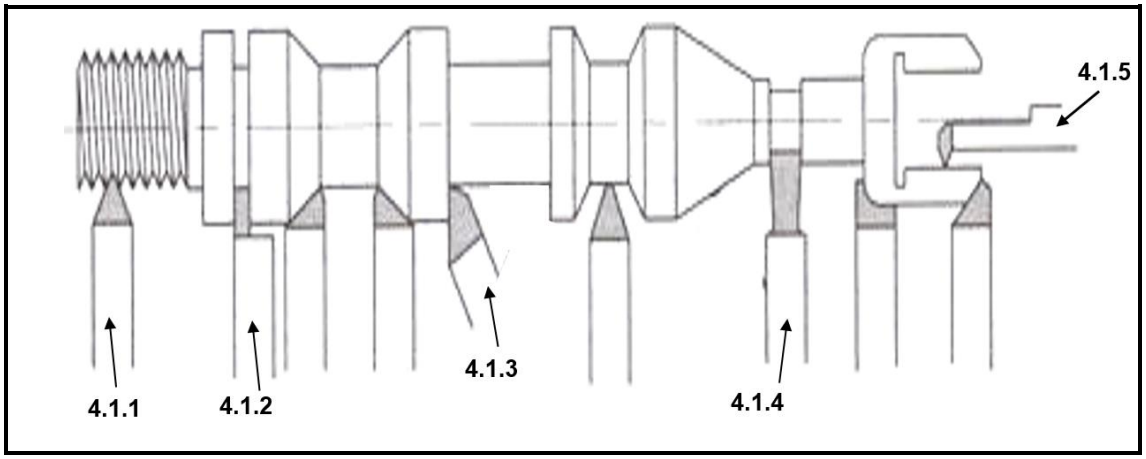

FIGURE 3

4.2 Compare the operation of a milling machine against that of centre lathe in terms of the following:

4.2.1 Clamping of the workpiece

4.2.2 Where the cutting tools fit into the machine

4.2.3 How many axes the machine has

(3 × 2) (6)

4.3 A machinist has to make a hole of 30,25 mm. He has to bore it out using a boring bar.

Give FIVE steps of how the machinist will go about to accomplish the desired hole to be machined. The material that is given to him is a solid bar. (5)

4.4 Make a neat drawing showing the boring operation described in QUESTION 4.3. The drawing should include the chuck, tool post, cutting tool (boring bar) and workpiece showing the hole. (5)

Copyright reserved

4.5 Indicate whether the following statements are TRUE or FALSE by writing only 'True' or 'False' next to the question number (4.5.1–4.5.3) in the ANSWER BOOK.

4.5.1 A milling machine can cut a spiral in a shaft using the dividing head.

4.5.2 When doing simple indexing, it is not necessary to do the calculation if a gear of 30 teeth has to be cut.

4.5.3 When doing angular indexing, it is not necessary to do the calculation if two slots precisely 120° from each other have to be cut.

(3 × 1) (3)

4.6 You are required to machine slots on a shaft using a milling machine. The slots are separated at an angle of 117°. Use the Brown and Sharp dividing head to calculate the required indexing. (5)

The details of the Brown and Sharp dividing head are as follows:

Plate 1: 15, 16, 17, 18, 19 and 20 holes
Plate 2: 21, 23, 27, 29, 31 and 33 holes
Plate 3: 37, 39, 41, 43, 47 and 49 holes

4.7 Various options are given as possible answers to the following questions. Choose the answer and write only the letter (A–D) next to the question number (4.7.1–4.7.4) in the ANSWER BOOK.

4.7.1 What is this type of cutter called?

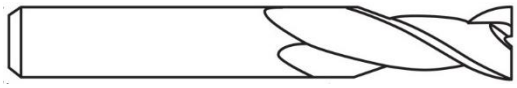

A Slot drill
B Rose cutter
C T-slot cutter
D Gear cutter

4.7.2 What is this type of cutter called?

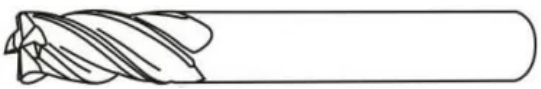

A Rose cutter
B End mill
C Slot drill
D Dovetail cutter

4.7.3 What is this type of cutter called?



A Rose cutter
B Dovetail cutter
C End mill
D Ball nose cutter

4.7.4 What accessory do you use to make a hole larger on a milling machine?

A Boring head
B Reamer
C Boring bar
D Rose cutter

(4 × 1) (4)

4.8 FIGURE 4 below shows a dividing head that is used on a milling machine. Identify the parts of the dividing head by writing only the answer next to the number (4.8.1–4.8.7) in the ANSWER BOOK. (7)

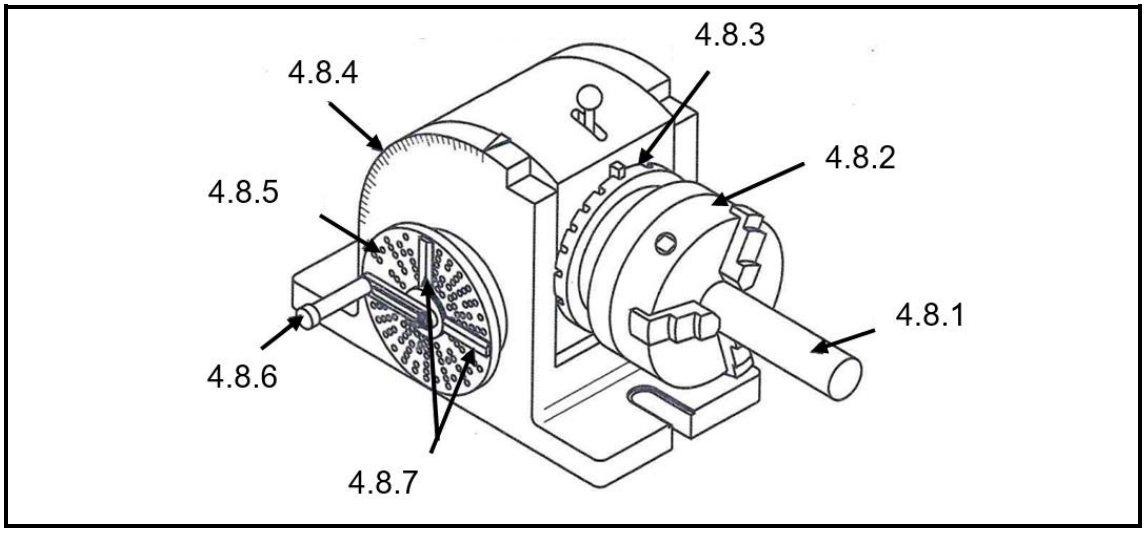

FIGURE 4

[40]

QUESTION 5

5.1 An engineer has to use a CAD program to show his design.

Name FIVE benefits of using a CAD program. (5 × 1) (5)

5.2 Why are layers important in the production of a CAD drawing? (2)

5.3 Drawing commands are used in AutoCAD.

Explain what the following commands are used for:

5.3.1 

5.3.2 

5.3.3 

5.3.4 

(4 × 2) (8)
[15]

TOTAL: 100

Copyright reserved