higher education & training

Department:
Higher Education and Training
REPUBLIC OF SOUTH AFRICA

NATIONAL CERTIFICATE (VOCATIONAL)

ENGINEERING GRAPHICS AND TECHNOLOGY
NQF LEVEL 2

(12050682)

15 November 2024 (Y-paper)
13:00–17:00

REQUIREMENT: A2 drawing sheet

Drawing instruments may be used.

This question paper consists of 6 pages.

211Q1N2415

Copyright reserved

DEPARTMENT OF HIGHER EDUCATION AND TRAINING
REPUBLIC OF SOUTH AFRICA

NATIONAL CERTIFICATE (VOCATIONAL)
ENGINEERING GRAPHICS AND TECHNOLOGY
NQF LEVEL 2
TIME: 4 HOURS
MARKS: 100

INSTRUCTIONS AND INFORMATION

1. Answer all the questions.
2. Read all the questions carefully.
3. Number the answers according to the numbering system used in this question paper.
4. Use both sides of the drawing sheet.
5. A 15 mm border must be drawn on both sides of the drawing sheet.
6. All drawing work including candidate information must be done in pencil.
7. A radius curve stencil may be used to draw smaller arcs.
8. Unspecified radii must be R6.
9. A balanced layout is very important and candidates will be penalised for poor planning.
10. All drawing work must conform to the latest SANS 10111 Code of Practice for Engineering Drawing.
11. Work neatly.

Copyright reserved

QUESTION 1

1.1 Print the answers to QUESTION 1.1.1–1.1.3 in capital letters, 5 mm high. (2)

State the description of the line types:

1.1.1 Line type A

1.1.2 Line type B

1.1.3 Line type F

(3 × 1) (3)

[5]

QUESTION 2

FIGURE 1 shows the front view of a machine casting.

Make a freehand drawing of the given view approximately twice the given size.

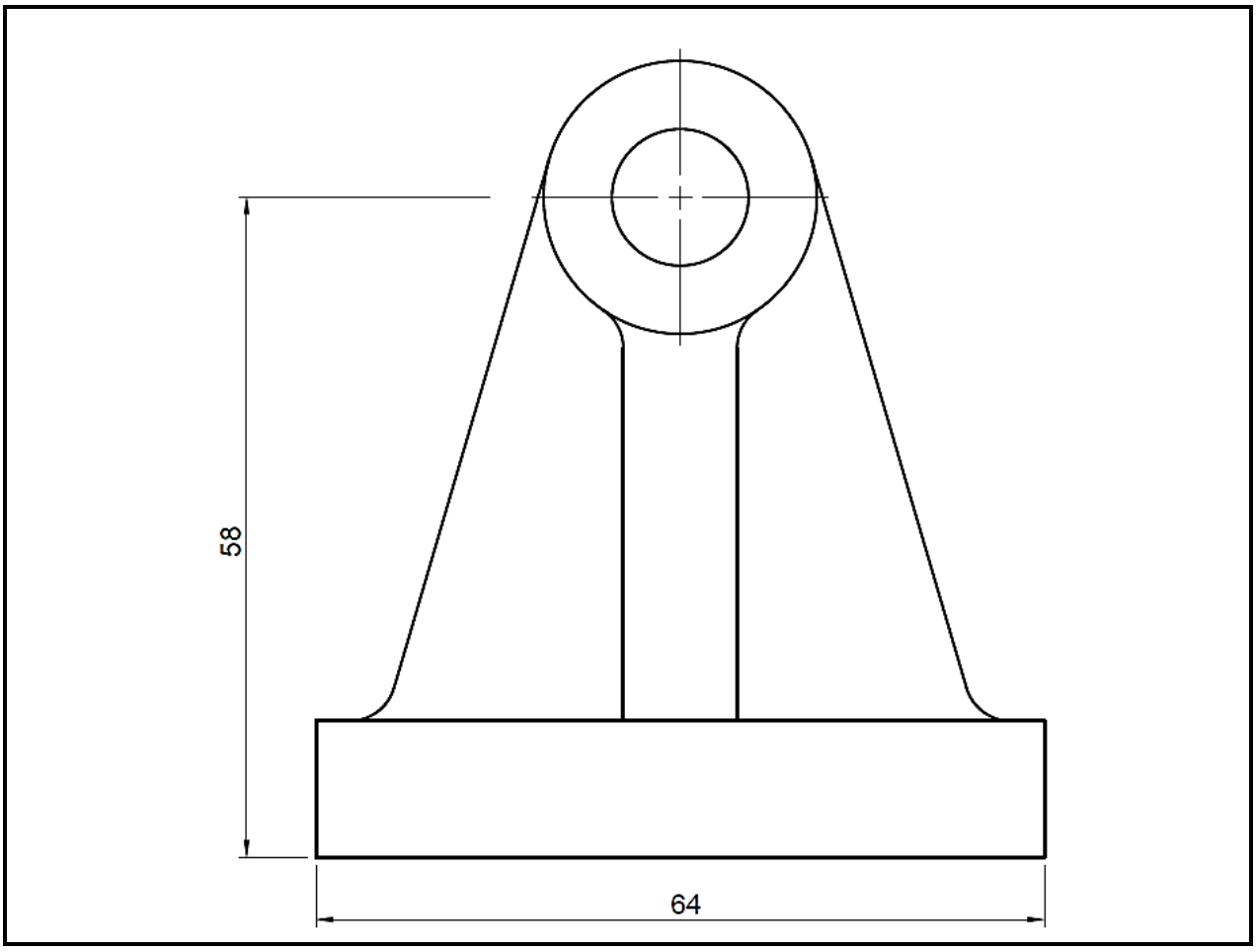

FIGURE 1

[15]

QUESTION 3

FIGURE 2 below shows a view of a cover plate for a pump.

Draw, to scale 1:1, the given view of the cover plate and show all the geometrical construction lines.

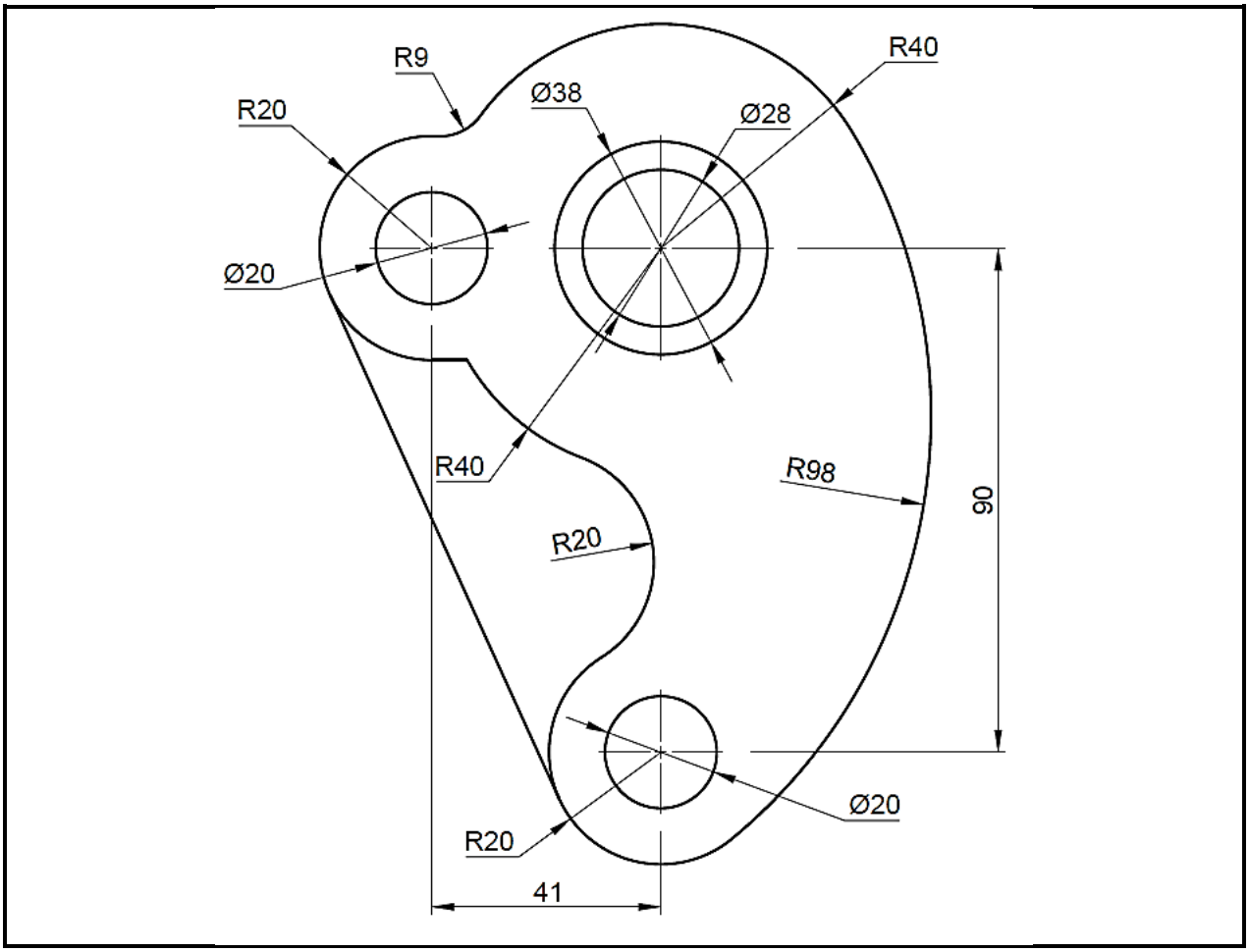

FIGURE 2 **[20]**

QUESTION 4

FIGURE 3 below shows the top view of a hexagonal prism. A piece of string has been wound tightly around the hexagonal prism in an anti-clockwise direction.

Draw the involute of the hexagonal prism.

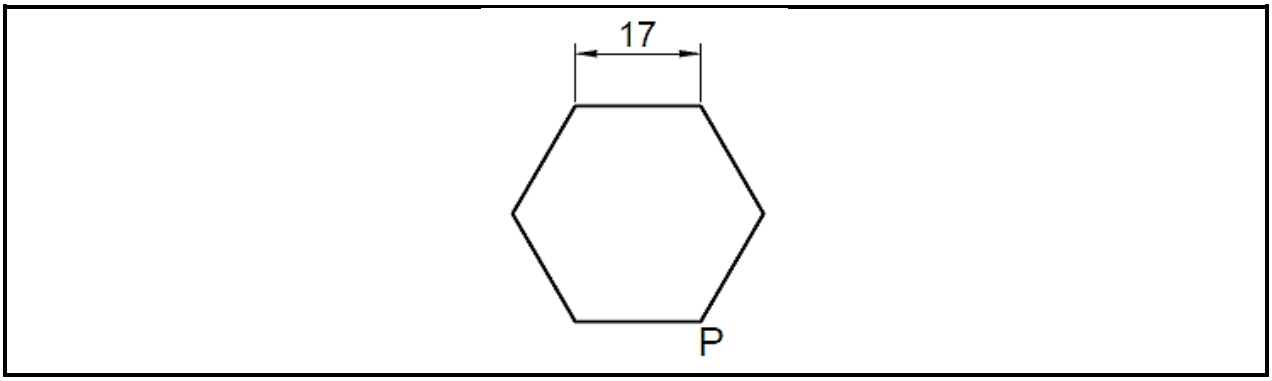

FIGURE 3 **[15]**

Copyright reserved

QUESTION 5

FIGURE 4 shows a front view of a hexagonal pyramid with a square recess on its base resting on its apex at 45° to the horizontal surface.

Draw, to scale 1:1 and in third angle orthographic projection, the following views and show all hidden detail:

5.1 A front view (8)

5.2 A right view (8)

5.3 A top view (9)

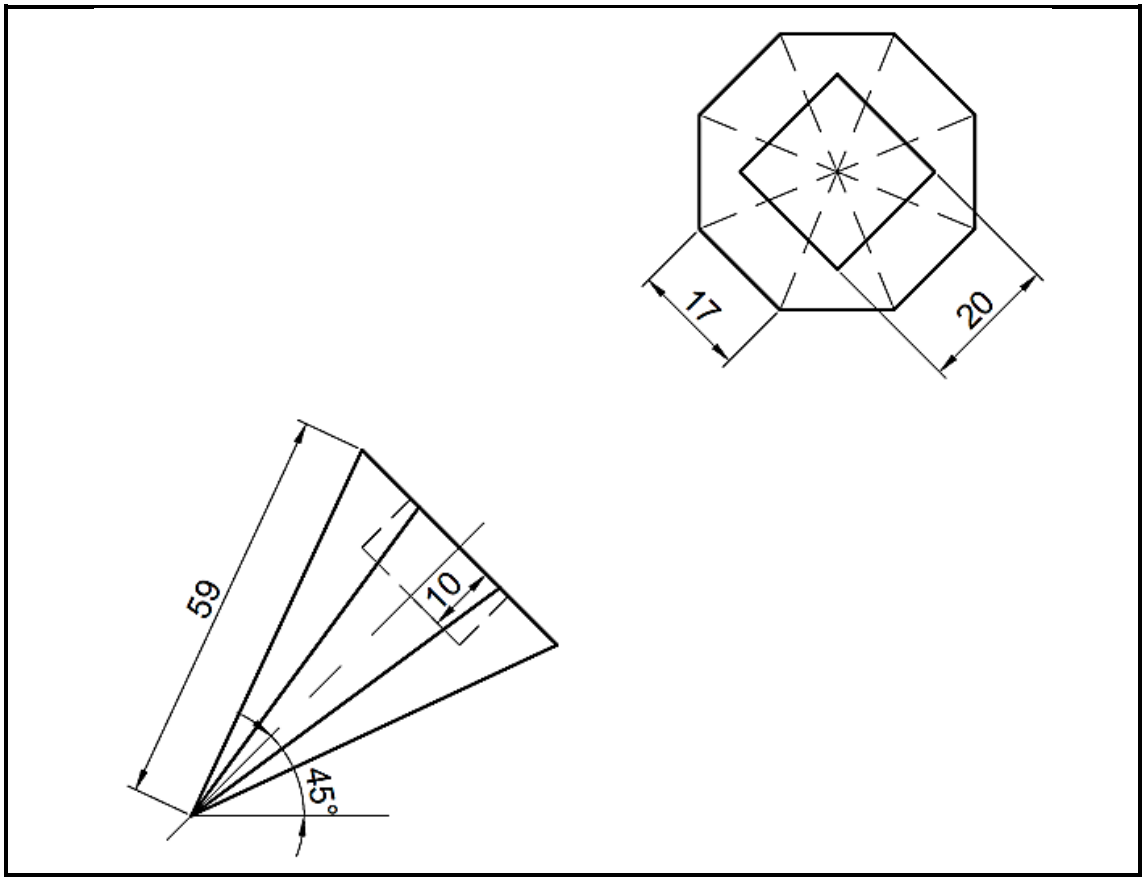

FIGURE 4

[25]

QUESTION 6

FIGURE 5 below shows the front and top views of a machine block.

Draw, to scale 1:1, an oblique projection of the machine block using the Cabinet method.

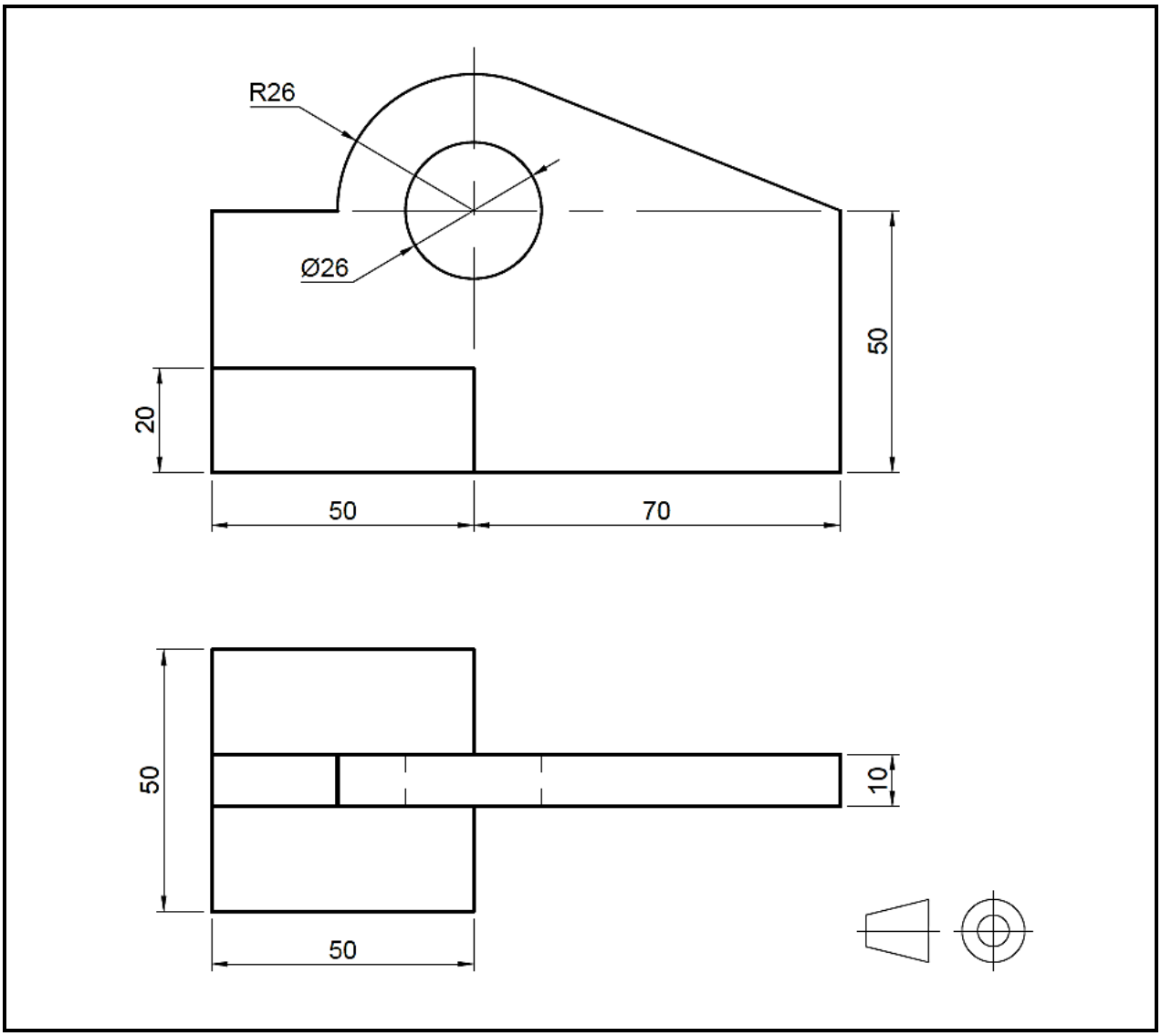

FIGURE 5

[20]

TOTAL: 100

Copyright reserved