higher education & training

Department:
Higher Education and Training
REPUBLIC OF SOUTH AFRICA

NATIONAL CERTIFICATE (VOCATIONAL)

ELECTROTECHNOLOGY
NQF LEVEL 4

(12040594)

15 November 2024 (X-paper)
09:00–12:00

This question paper consists of 9 pages.

209Q1N2415

Copyright reserved

DEPARTMENT OF HIGHER EDUCATION AND TRAINING
REPUBLIC OF SOUTH AFRICA

NATIONAL CERTIFICATE (VOCATIONAL)
ELECTROTECHNOLOGY
NQF LEVEL 4
TIME: 3 HOURS
MARKS: 100

INSTRUCTIONS AND INFORMATION

1. Answer all the questions.
2. Read all the questions carefully.
3. Number the answers according to the numbering system used in this question paper.
4. Use only a black or blue pen.
5. Write neatly and legibly.

Copyright reserved

QUESTION 1

1.1 Indicate whether the following statements are TRUE or FALSE by writing only 'True' or 'False' next to the question number (1.1.1–1.1.5) in the ANSWER BOOK.

1.1.1 A type of adjustable speed drive that changes the strength of a magnetic field in a coupling to determine the amount of slip between the motor and the driven equipment can be referred to as a direct coupling.

1.1.2 The speed that the output shaft of the drive attains with rated load connected and with the drive adjusted to deliver rated output at rated speed.

1.1.3 Fuses and circuit breakers are used for overload protection in a motor control circuit.

1.1.4 IP rating on a motor nameplate refers to the current and power of that motor.

1.1.5 The efficiency of a motor compares the mechanical output to the electrical input and is a measure of how well the motor turns the electrical energy it receives into a useful mechanical output.

(5 × 1) (5)

1.2 Define the term, *slip.* (2)

1.3 Write the mathematical equation for Ohm's law and name each quantity. (3)

1.4 Three-phase AC motors are the most commonly used motors in industry.

Name THREE advantages why three-phase AC motors are used. (3)

1.5 A six pole, three-phase induction motor is connected to a 380 V supply at 50 Hz.

1.5.1 Calculate the speed of the motor in r/min. (4)

1.5.2 What will happen to the speed if the frequency is reduced to 30 Hz? (1)

1.5.3 Give TWO disadvantages of using synchronous motors. (2)

[20]

QUESTION 2

2.1 Refer to FIGURE 1 below. A 380 V three-phase induction motor coupled to a gear box drives a conveyor belt. You are required to design the power and control circuit for the system.

The control voltage is 24 V DC. Your control circuit must include overload protection, stop and start push buttons to start and stop operation.
A selector switch must also be included. The conveyor can either be operated in RUN/JOG mode. In run mode, when the start push button is pressed, the conveyor will run continuously and stop when stop button is pressed. In jog mode, when the jog push button is pressed the conveyor will inch forward and stop when the jog push button is released.

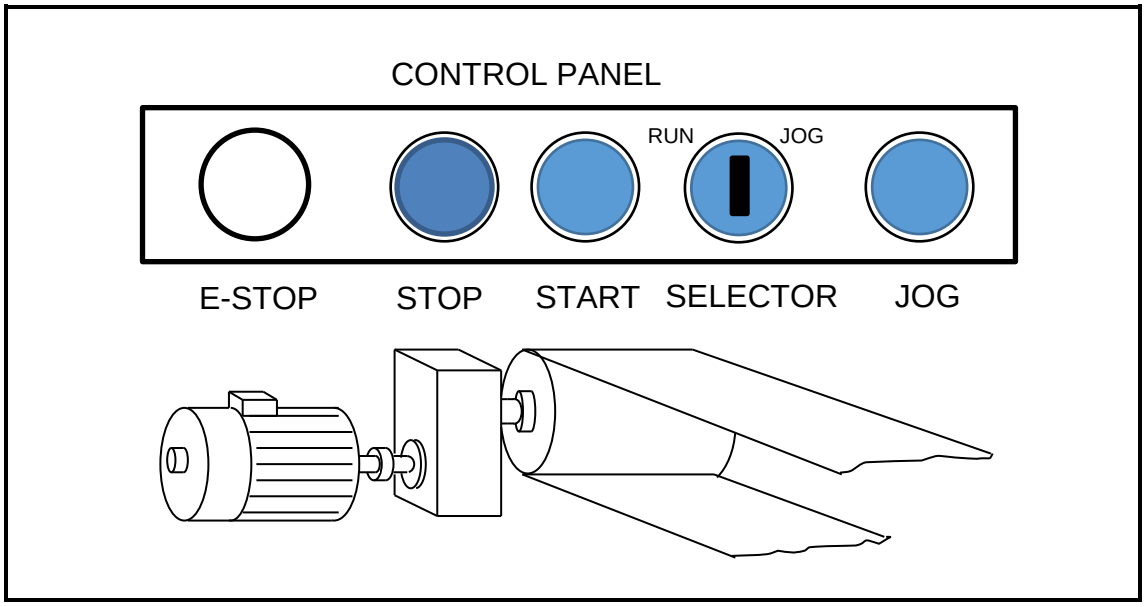

FIGURE 1 (10)

2.2 In many applications two or more speeds are required by a three-phase motor, which is also referred to as a Dahlander control circuit.

2.2.1 Explain briefly the operation of the Dahlander control circuit. (5)

2.2.2 Give an application where this may be used. (1)

2.3 Motors can be controlled by either maintained control or momentary control.

Explain the operation of these controls. (4)
[20]

QUESTION 3

3.1 Circuit diagrams indicate the voltage-free or current-free status of the electrical installation.

Briefly describe each of the following diagrams:

3.1.1 Block diagram

3.1.2 Circuit diagram

3.1.3 Equivalent circuit diagram

(3 × 2) (6)

3.2 Choose a term from COLUMN B that matches a description in COLUMN A. Write only the letter (A–E) next to the question number (3.2.1–3.2.4) in the ANSWER BOOK.

COLUMN A		COLUMN B	
3.2.1	A state of being in accordance with established guidelines, specifications, or legislation or the process of becoming so	A	vibration
3.2.2	To make or become unusable through long or heavy use	B	wear
3.2.3	Refers to mechanical oscillations about an equilibrium point	C	planning
3.2.4	The act of formulating a programme for a definite course of action	D	compliance
		E	installation

(4 × 1) (4)

3.3 Refer to FIGURE 2 below. Prepare a materials and tools list for the hoist to be installed. Use the templates with the headings provided (3.3.1 and 3.3.2).

NOTE: For material requirements, only the electrical control components must be listed.

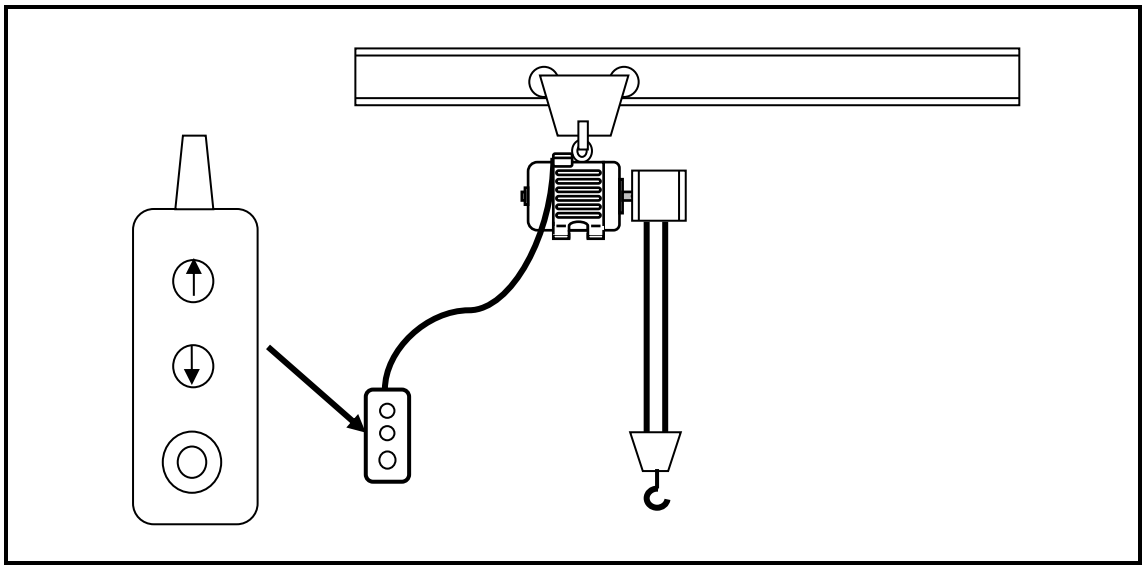

FIGURE 2

3.3.1

MATERIAL REQUIREMENTS:		
Item	**Description**	**Quantity**
1		
2		
3		
4		
5		

(5 × 1)

3.3.2

TOOL REQUIREMENTS:		
Item	**Description**	**Quantity**
1		
2		
3		
4		
5		

(5 × 1) (10)

[20]

QUESTION 4

4.1 Electrical noise is a very important consideration in any installation of solid-state control. Wiring practices may vary from situation to situation.

Name THREE basic aspects to be considered to minimise electrical noise. (3)

4.2 FIGURE 3 below shows the control circuit for a forward/reverse – star/delta. Convert these controls to a PLC programme using ladder logic and the input/output references given in the diagram.

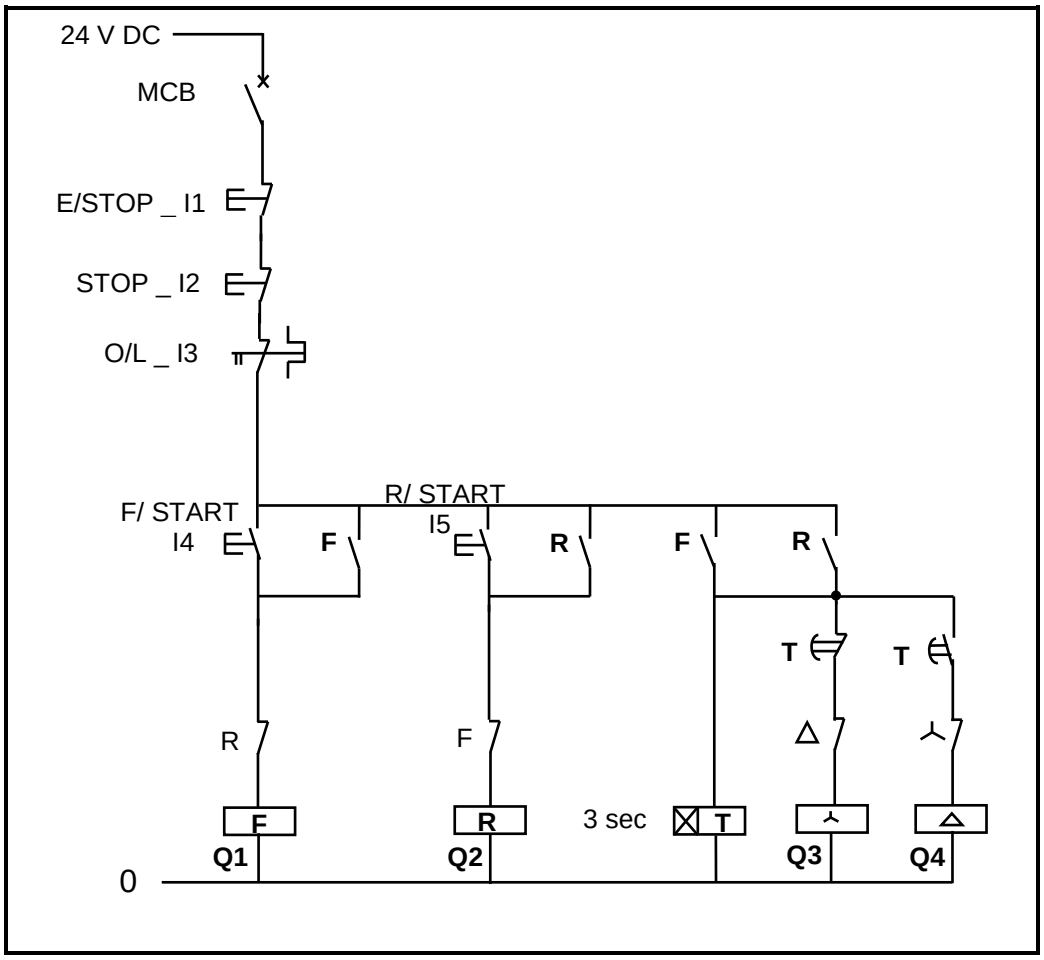

FIGURE 3

4.2.1 Write a PLC program in ladder logic for the circuit. (10)

4.2.2 Draw a PLC wiring diagram. (7)
[20]

QUESTION 5

5.1 A well-planned and executed maintenance schedule is essential for the satisfactory operation of electronic and electrical equipment. The type and frequency of the maintenance operation will vary with the kind and complexity of the equipment as well as with the nature of the operating conditions.

List FIVE factors that should be considered when a maintenance plan is being formulated. (5)

5.2 The electromagnetic environments vary from place to place because many different sources of disturbance, which can be natural or man-made, exist.

Briefly explain the following regarding electromagnetic interferences.

5.2.1 Surge current

5.2.2 Electromagnetic interference (EMI)

5.2.3 Faraday cage

(3 × 2) (6)

5.3 Modern variable speed drives (VSD) require very little maintenance, however, certain items need to be considered and planned for in the maintenance plan.

Name FOUR factors that should be considered in carrying out the maintenance plan. (4)

Copyright reserved

5.4 Refer to the converter in FIGURE 4 below and answer the questions that follow.

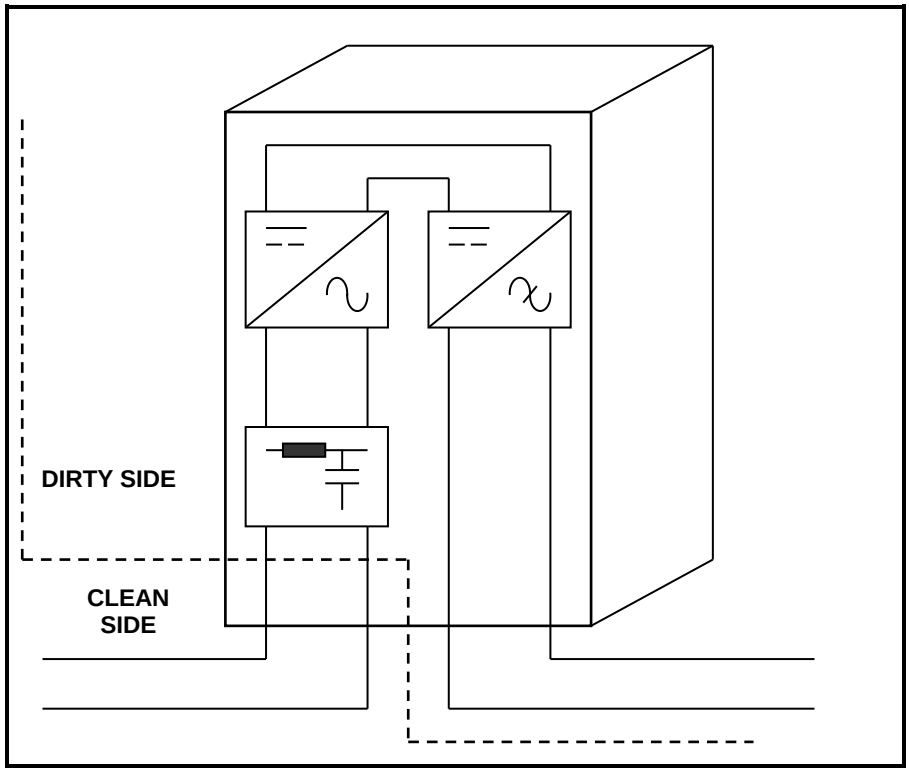

FIGURE 4

5.4.1 Briefly describe what is meant by the *dirty side* and *clean side*. (4)

5.4.2 How is the clean side kept clean in the converter? (1)

[20]

TOTAL: 100

Copyright reserved