higher education & training

Department:
Higher Education and Training
REPUBLIC OF SOUTH AFRICA

NATIONAL CERTIFICATE (VOCATIONAL)

ELECTROTECHNOLOGY
NQF LEVEL 2

(12040212)

15 November 2024 (Y-paper)
13:00–16:00

Calculators may be used.

This question paper consists of 8 pages and 1 formula sheet.

207Q1N2415

Copyright reserved

DEPARTMENT OF HIGHER EDUCATION AND TRAINING
REPUBLIC OF SOUTH AFRICA

NATIONAL CERTIFICATE (VOCATIONAL)
ELECTROTECHNOLOGY
NQF LEVEL 2
TIME: 3 HOURS
MARKS: 100

INSTRUCTIONS AND INFORMATION

1. Answer all the questions.
2. Read all the questions carefully.
3. Number the answers according to the numbering system used in this question paper.
4. Start each question on a new page.
5. Use only a black or blue pen.
6. Write neatly and legibly.

Copyright reserved

QUESTION 1

1.1 Choose a description from COLUMN B that matches a term in COLUMN A. Write only the letter (A–F) next to the question number (1.1.1–1.1.5) in the ANSWER BOOK.

COLUMN A		COLUMN B	
1.1.1	Atom	A	the direction of the induced current opposes the change in the magnetic flux
1.1.2	Molecule	B	the smallest participles of a compound have all the properties of that compound
1.1.3	Faraday's Law of Induction	C	a semiconductor device that allows current to flow in one direction
1.1.4	Lenz's Law	D	a semiconductor device used to amplify or switch electronic signals
1.1.5	Transistor	E	the smallest particles of a chemical element
		F	the induced voltage in a coil is proportional to the rate of change of magnetic flux

(5 × 1) (5)

1.2 Two resistors with values of 2 Ω and 4 Ω are connected in parallel. This combination is then connected in series with a 3 Ω resistor across a 12 V supply.

Calculate the following:

1.2.1 The total resistance of the circuit (3)

1.2.2 The total current in the circuit (I_T) (2)

1.2.3 The volt drop across the 3 Ω resistor ($V_{3\Omega}$) (2)

1.2.4 The magnitude of the current flowing through the 4 Ω resistor (2)

1.3 An ideal transformer with a voltage of 3450/230 V has 300 turns on the primary side.

Calculate the following:

1.3.1 The turn ratio

1.3.2 The number of secondary turns

1.3.3 The primary current when the transformer delivers a secondary current of 15 A

(3 × 2) (6)

[20]

Copyright reserved

QUESTION 2

2.1 Draw the IEC (electrical wiring) symbol for each of the following components:

2.1.1 Earth connector

2.1.2 Generator

2.1.3 Electric bell

(3 × 1) (3)

2.2 Draw a neat and fully labelled circuit diagram of a stove sub-circuit. (6)

2.3 In accordance with the SANS 10142 wiring code, there are recommended conductors and circuit breaker sizes for domestic installation.

State the conductor and circuit breaker sizes for each of the following sub-circuits by writing only the answer to the question number (2.3.1–2.3.6) in the ANSWER BOOK.

ELECTRICAL SUB-CIRCUITS	CIRCUIT BREAKER SIZE	CONDUCTOR SIZE
Socket outlet	2.3.1	2.3.2
Stove	2.3.3	2.3.4
Geyser	2.3.5	2.3.6

(6)

2.4 In a mechatronics workshop, various file shapes are used for different tasks.

List FOUR types of files that are commonly used in these workshops. (4)

2.5 There are two types of electric shock, namely direct contact and indirect contact.

State the difference between *direct contact* and *indirect contact*. (2)

2.6 Explain the use of each of the following tools:

2.6.1 Side cutter

2.6.2 Spirit level

2.6.3 Bending spring

2.6.4 Hacksaw

(4 × 1) (4)

[25]

QUESTION 3

3.1 Briefly explain how to test a diode using a digital multimeter. (4)

3.2 Study the circuit in FIGURE 1 below and then answer the question.

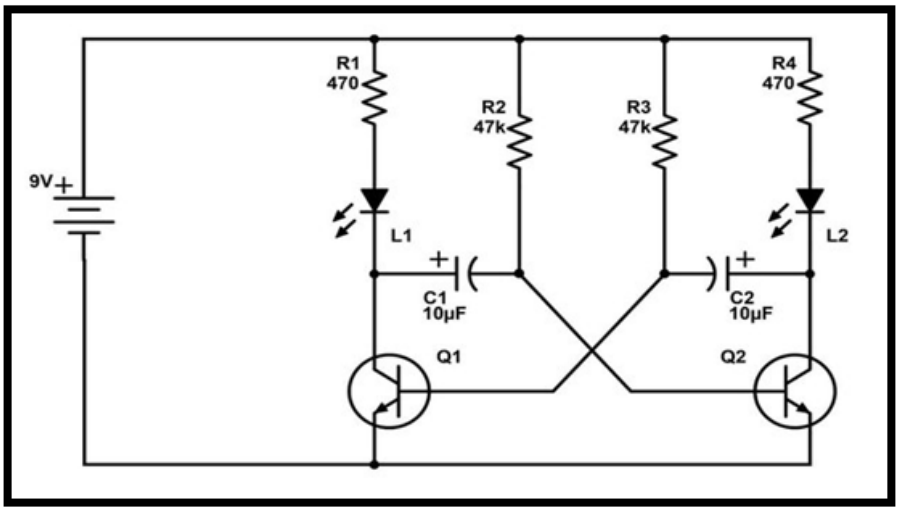

FIGURE 1

Draw a materials list of the components needed for the circuit in FIGURE 1. For your answer draw a table and insert the components in the ANSWER BOOK. (6 × 1) (6)

3.3 Explain THREE ways to take care of a soldering iron. (3)

3.4 Identify the components in the block diagram shown in FIGURE 2 below by writing only the answers next to the letter (A–F) in the ANSWER BOOK.

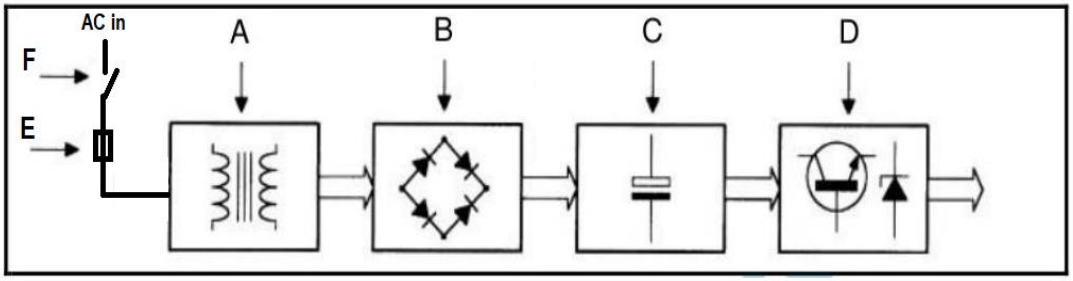

FIGURE 2

(6)

Copyright reserved

3.5 The figure below shows the wiring diagram of an electronic circuit. Make a neat, labelled switching circuit diagram of the electronic circuit in FIGURE 3.

Note: TR1 and TR2 are NPN transistors.

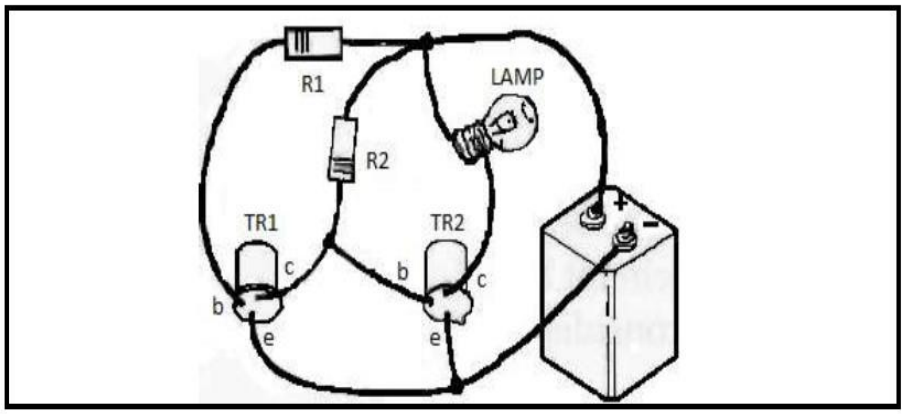

FIGURE 3

(6)
[25]

QUESTION 4

4.1 Indicate whether the following statements are TRUE or FALSE by writing only 'True' or 'False' next to the question number (4.1.1–4.1.5) in the ANSWER BOOK.

4.1.1 A short circuit is a type of fault condition in electro-technical circuits.

4.1.2 Visual inspection is not a valid troubleshooting technique for electro-technical circuits.

4.1.3 A structured scientific approach to maintenance and troubleshooting is not necessary for electro-technical circuits.

4.1.4 Ordering components is not a step in the process of repairing electro-technical systems.

4.1.5 Repairing a short circuit requires identifying the point of fault and replacing damaged components.

(5 × 1) (5)

4.2 Name TWO tests that must be done on a cable that supplies a motor. (2)

4.3 FIGURE 4 below shows two identical bulbs that are connected in series across a 12 volt supply. Study the circuit diagram and answer the questions that follow.

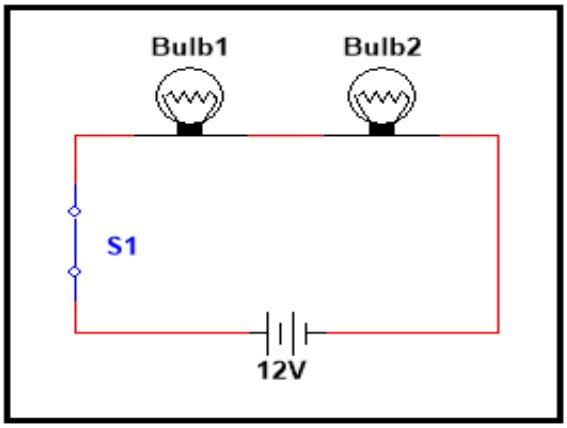

FIGURE 4

4.3.1 If another bulb of a similar rating is added in series in the circuit, what effect will it have on the brightness of the bulbs? Motivate your answer. (3)

4.3.2 Predict whether any current will flow in the circuit if bulb 2 is blown. (2)

4.4 Study the circuit in FIGURE 5 below and answer the questions that follow.

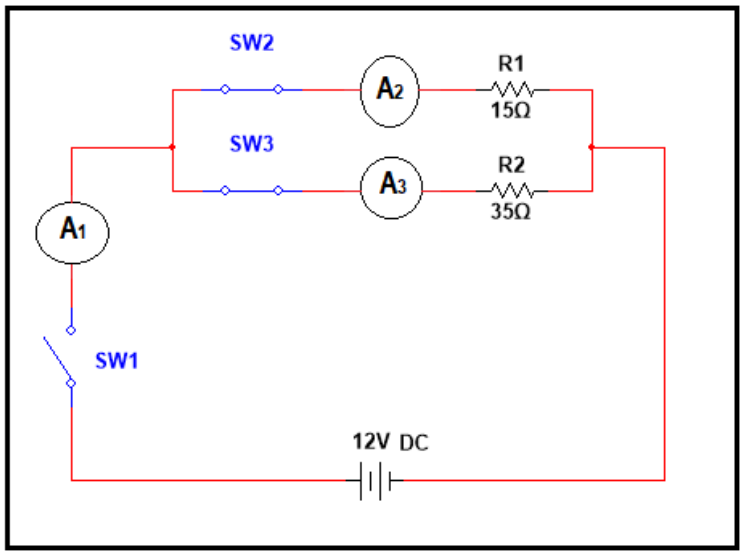

FIGURE 5

4.4.1 When all switches are closed in the circuit, what will the reading be on meter A_1? (4)

4.4.2 What will the reading be on ammeter A_2 if all switches are closed? (2)

4.4.3 What will be the reading on the ammeter A_3 if switch SW2 is opened? (2)

[20]

Copyright reserved

QUESTION 5

5.1 As a mechatronic person, you are expected to have a well-designed maintenance programme.

Name TWO preventative maintenance procedures, and explain each one. (2 × 2) (4)

5.2 Explain THREE reasons why time management is important. (3)

5.3 James should wear comprehensive PPE to protect himself from potential electrical hazards while working on a faulty light fixture.

List THREE types of PPE that James would need to complete the task. (3)
[10]

TOTAL: 100

Copyright reserved

(12040212)

FORMULA SHEET

ELECTROTECHNOLOGY LEVEL 2

1. $\boldsymbol{P = V\ I\ Cos\phi}$
2. $Q = V\ I\ Sin\phi$
3. $\boldsymbol{S = V\ I}$
4. $\boldsymbol{V = I\ R}$
5. $P = V\ I$
6. $\boldsymbol{X_L = 2\pi\ f\ L}$
7. $X_C = \dfrac{1}{2\pi\ f\ C}$
8. $\boldsymbol{Z = \sqrt{R^2 + (X_L - X_C)^2}}$
9. $V_T = \sqrt{V_R^2 + (V_L - V_C)^2}$
10. $V_1 = \left(\dfrac{R_1}{R_t}\right) V_T$
11. $V_L = IX_L$
12. $I_T = \sqrt{I_R^2 + (I_L - I_C)^2}$
13. $tan\emptyset = \dfrac{I_L - I_C}{I_R}$
14. $Z = \dfrac{V}{I}$
15. $A = \dfrac{\pi\ d^2}{4}$
16. $R_T = R_1 + R_2 + R_3 + \cdots + R_n$
17. $\dfrac{1}{R_T} = \dfrac{1}{R_1} + \dfrac{1}{R_2} + \dfrac{1}{R_3} + \cdots + \dfrac{1}{R_n}$
18. $C_T = C_1 + C_2 + C_3 + \cdots + C_n$
19. $\dfrac{1}{C_T} = \dfrac{1}{C_1} + \dfrac{1}{C_2} + \dfrac{1}{C_3} + \cdots + \dfrac{1}{C_n}$
20. $L_T = L_1 + L_2 + L_3 + \cdots + L_n$
21. $\dfrac{1}{L_T} = \dfrac{1}{L_1} + \dfrac{1}{L_2} + \dfrac{1}{L_3} + \cdots + \dfrac{1}{L_n}$
22. $Q = C\ V$
23. $\boldsymbol{R_t = R_0(1 + \alpha t)}$
24. $\dfrac{V_1}{V_2} = \dfrac{N_1}{N_2} = \dfrac{I_2}{I_1}$
25. $\boldsymbol{I_1 = \left(\dfrac{R_2}{R_1 + R_2}\right) I_T}$
26. $V_C = IX_C$
27. $R = \dfrac{p\ l}{A}$
28. $tan\emptyset = \dfrac{X_L - X_C}{R}$
29. $E = I^2\ R\ t$
30. $n_s = \dfrac{f}{p}$
31. $E = V + I\ r$

Copyright reserved