higher education & training

Department:
Higher Education and Training
REPUBLIC OF SOUTH AFRICA

NATIONAL CERTIFICATE (VOCATIONAL)

ELECTRONICS
NQF LEVEL 2

(10041012)

15 November 2024 (Y-paper)
13:00–16:00

This question paper consists of 7 pages.

205Q1N2415

Copyright reserved

DEPARTMENT OF HIGHER EDUCATION AND TRAINING
REPUBLIC OF SOUTH AFRICA

NATIONAL CERTIFICATE (VOCATIONAL)
ELECTRONICS
NQF LEVEL 2
TIME: 3 HOURS
MARKS: 100

INSTRUCTIONS AND INFORMATION

1. Answer all the questions.
2. Read all the questions carefully.
3. Number the answers according to the numbering system used in this question paper.
4. Start each section on a new page.
5. Use only a black or blue pen.
6. Write neatly and legibly.

Copyright reserved

QUESTION 1

1.1 Various options are given as possible answers to the following questions. Choose the answer and write only the letter (A–D) next to the question number (1.1.1–1.1.5) in the ANSWER BOOK.

1.1.1 Voltage or potential difference …

A causes electrons to jump.
B causes electrons to move upwards and side by side.
C causes electrons to move.
D causes electrons to move in circular movements.

1.1.2 An electric field …

A is the driving force for the voltage.
B is the driving force for the charge.
C is the driving force for the current.
D is the driving force for the electrons.

1.1.3 Electrical conduction is …

A the overall capacity of a material to allow the flow of electrons.
B the overall capacity of a material to block the flow of electrons.
C the overall capacity of a material to slow the flow of electrons.
D the overall capacity of a material to resist the flow of electrons.

1.1.4 Direction of flow electrons …

A move/flow from the negative terminal to the positive.
B move/flow from the positive terminal to the negative.
C move/flow from the positive terminal to the positive.
D move/flow from the negative terminal to the negative.

1.1.5 A conductive material.

A Wood
B Glass
C Copper
D Rubber

(5 × 1) (5)

1.2 For this experiment, we use a 6-volt battery to power an LED. LEDs are fragile and can only have a certain amount of current flowing through them before they burn out. Documentation on LEDs, always indicate a 'current rating'. This is the maximum amount of current that can flow through the particular LED before it burns out. In this case, the current rating of the LED is 20 mA and the voltage across the LED is 1.2 V.

1.2.1 Draw and fully label the circuit diagram. (5)

1.2.2 Calculate the value of the resistor needed to protect the LED from over current. (5)
[15]

QUESTION 2

2.1 Indicate whether the following statements are TRUE or FALSE by writing only 'True' or 'False' next to the question number (2.1.1–2.1.5) in the ANSWER BOOK. Give a reason for each answer.

2.1.1 A diode conducts in both directions.

2.1.2 One can replace a capacitor with a transistor.

2.1.3 A resistor can be used to limit current in a circuit.

2.1.4 A transformer can be used to convert AC to DC.

2.1.5 The unit for measuring a capacitor is Farad.

(5 × 1) (5)

2.2 Show by means of a sketch how a half-wave rectifier is produced. (3)

2.3 Draw simple filter circuit. (2)
[10]

QUESTION 3

3.1 Choose a description from COLUMN B that matches an item in COLUMN A. Write only the letter (A–D) next to the question number (3.1.1–3.1.5) in the ANSWER BOOK.

COLUMN A		COLUMN B	
3.1.1	Safe zone	A	avoid horseplay in the workshop
3.1.2	Earth leakage	B	heart failure and death
3.1.3	Safety practices	C	cramping start
3.1.4	The line cut-out	D	will trip, preventing any further shock
3.1.5	Danger zone	E	may trip due to a short between the earth and line

(5 × 1) (5)

3.2 The Occupational Health and Safety Act sets out workers' rights to a healthy and safe work environment. The Act also sets out the responsibilities of workers and employers.

List FIVE of the responsibilities of workers in terms of the Act. (5 × 1) (5)
[10]

QUESTION 4

4.1 Complete the following sentences by writing only the missing word or words next to the question number (4.1.1–4.1.4) in the ANSWER BOOK.

Voltmeters are connected in (4.1.1) … with whatever device's voltage is to be measured. A parallel connection is used because objects in parallel experience the same (4.1.2) … difference. Ammeters are connected in (4.1.3) … with whatever device's current is to be measured. A series connection is used because objects in series have the same (4.1.4) … passing through them.

(4 × 1) (4)

4.2 Draw an electric circuit that show the measuring of current and voltage. (3)

4.3 Write the abbreviation PPE in full, and give TWO examples of PPE. (1)
[10]

Copyright reserved

QUESTION 5

5.1 State FIVE key points to remember when soldering. (5)

5.2 Draw THREE soldered joints in which you indicate the following:

1. Too little solder
2. Just the right amount of solder
3. Too much solder (5)

[10]

QUESTION 6

6.1 State FIVE electrical safety tips in the workplace. (5)

6.2 List SIX basic tools that one needs in and electronics environment. (6)

6.3 Analyse the circuit below and indicate what the different labels refer to:

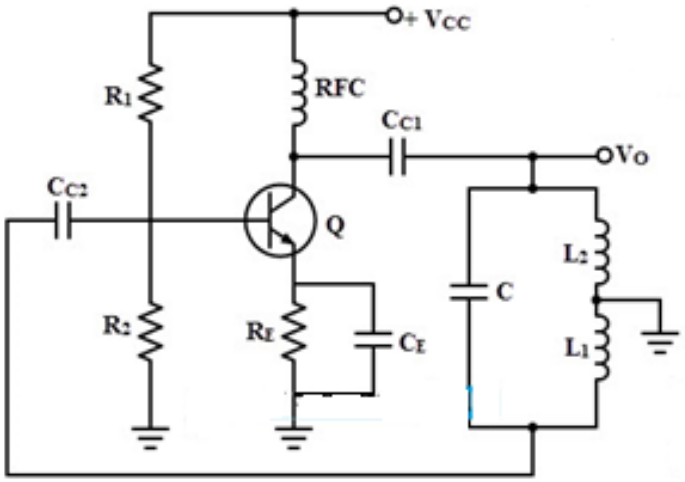

(4)

[15]

QUESTION 7

7.1 What is the difference between *analogue* and *binary systems*? (3)

7.2 Draw the truth table of an OR gate. (2)

[5]

QUESTION 8

8.1 The international standard, IEC 61131-3, defines five programming languages for programmable control systems.

Name FIVE of these programming languages. (5 × 1) (5)

8.2 Show by means of a sketch diagram how a PC is connected to a PLC. (5)

8.3 Draw a labelled ladder diagram of an OR-function logic gate with two input contacts. (5)

[15]

QUESTION 9

9.1 Draw a block diagram of ISDN user connectivity to a network. (6)

9.2 List FOUR basic protocols. (4)

[10]

TOTAL: 100

Copyright reserved