higher education & training

Department:
Higher Education and Training
REPUBLIC OF SOUTH AFRICA

NATIONAL CERTIFICATE (VOCATIONAL)

CONSTRUCTION PLANNING
NQF LEVEL 2

(12010042)

15 November 2024 (Y-paper)
13:00–16:00

Calculators may be used.

This question paper consists of 8 pages.

195Q1N2415

Copyright reserved

DEPARTMENT OF HIGHER EDUCATION AND TRAINING
REPUBLIC OF SOUTH AFRICA

NATIONAL CERTIFICATE (VOCATIONAL)
CONSTRUCTION PLANNING
NQF LEVEL 2
TIME: 3 HOURS
MARKS: 100

INSTRUCTIONS AND INFORMATION

1. Answer all the questions.
2. Read all the questions carefully.
3. Number the answers according to the numbering system used in this question paper.
4. Start each section on a new page.
5. Use only a blue or black pen.
6. The drawings, diagram and sketches must be done in pencil.
7. The drawings, sketches and diagrams must be neat, reasonably large and in proportion.
8. Clearly cross out all work you do not want to be marked.
9. All the abbreviations and symbols must comply with the latest National Building Regulations and all relevant SANS (SABS) codes.
10. Write neatly and legibly.

Copyright reserved

QUESTION 1

1.1 Explain the following terms used in construction that make it easy for the technical staff to do their work:

1.1.1 Servitude (2)

1.1.2 Building line (2)

1.2 Name ONE common material used in masonry construction. (1)

[5]

QUESTION 2

2.1 Choose a term from COLUMN B that matches a description in COLUMN A. Write the matching word next to the question number (3.1–3.5) in the ANSWER BOOK.

COLUMN A		COLUMN B	
2.1.1	Pressure	A	candelas
2.1.2	Energy	B	moles
2.1.3	Luminous intensity	C	newton
2.1.4	Substance	D	pascal
2.1.5	Force	E	joule

(5 × 1) (5)

2.2 How many zeros do the following prefixes have?

2.2.1 Milli

2.2.2 Giga

2.2.3 Mega

(3 × 1) (3)

2.3 Calculate the area of the rectangle with long side 250 m and the short side 250 cm (2)

[10]

Copyright reserved

QUESTION 3

3.1 What are the disadvantages of using a synthetic measuring tape? (3)

3.2 What are the readings shown in FIGURE 1 on the vernier scale and in FIGURE 2 on the micrometer?

3.2.1

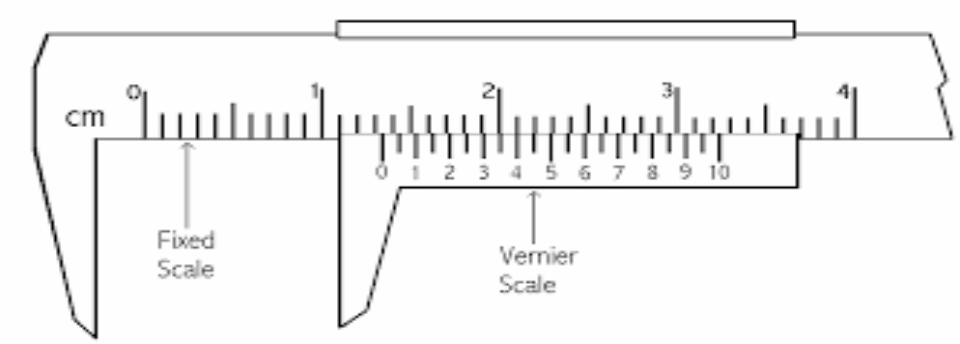

FIGURE 1

3.2.1

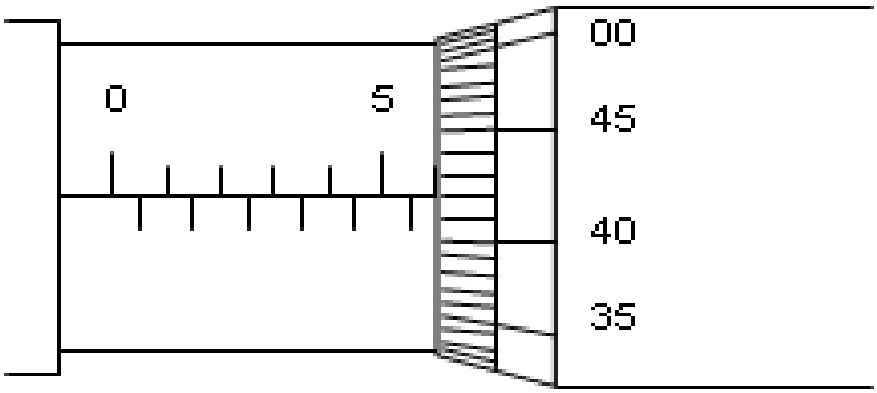

FIGURE 2

(2 × 1) (2)

3.3 Briefly describe the procedure to set up trenches on a foundation plan. (5)

3.4 A hexagon has one side AB = 7 cm. Illustrate by means of a diagram in the ANSWER BOOK how to set out a hexagon. (6)

3.5 Give THREE disadvantages of using a water level. (3)

3.6 Describe the procedure to focus a theodolite before taking the readings. (4)

3.7 Define *tacheometry.* (2)

[25]

QUESTION 4

4.1 What are the TWO functions of a strip foundation? (2)

4.2 Name FOUR factors to consider when selecting a foundation. (4)

4.3 Explain what a raft foundation is. You may use a rough sketch to explain. (4)
[10]

QUESTION 5

5.1 Calculate the area of plaster finish of 15 mm required to cover the internal and external walls of a building shown in FIGURE 3 below. The building has two window openings 2 m × 2 m, and a door opening 1,5 m × 2 m.

5.1

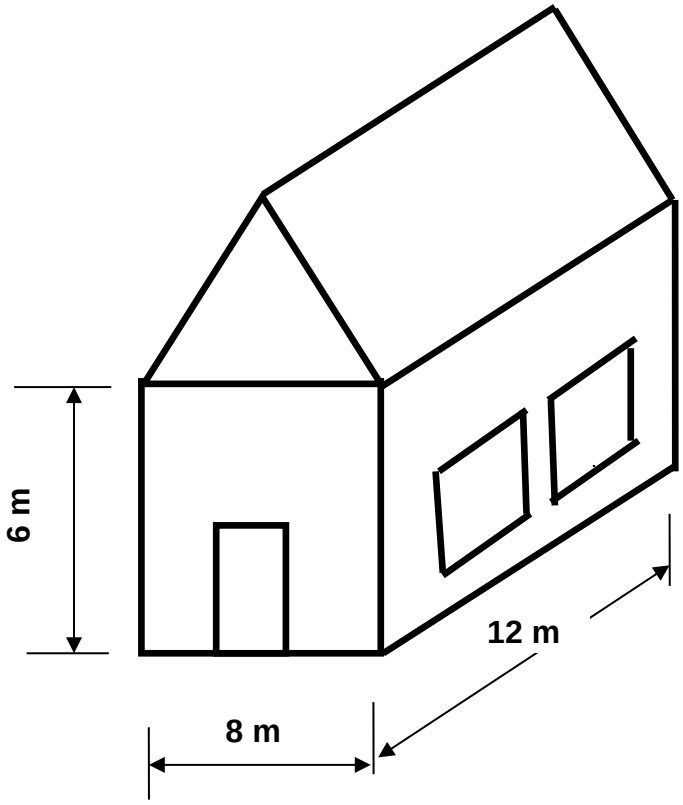

(6)

FIGURE 3

5.2 Calculate the number of bricks that are required to build a wall 15 m long and 2.5 m high. The size of a brick is 220 mm × 110 mm × 75 mm. (4)
[10]

Copyright reserved

QUESTION 6

6.1 Many different types of drawing can be used during the process of designing and constructing buildings.

Explain some of the more commonly used types of drawing listed below:

6.1.1 Sketch drawings

6.1.2 Design drawings

6.1.3 Working drawings

(3 × 2) (6)

6.2 What are the building inspectors in the town planning department of the local authority looking for when submitting the plan for approval? (4)

6.3 Calculate the missing dimensions 'A', 'B' and 'C' from the drawing.

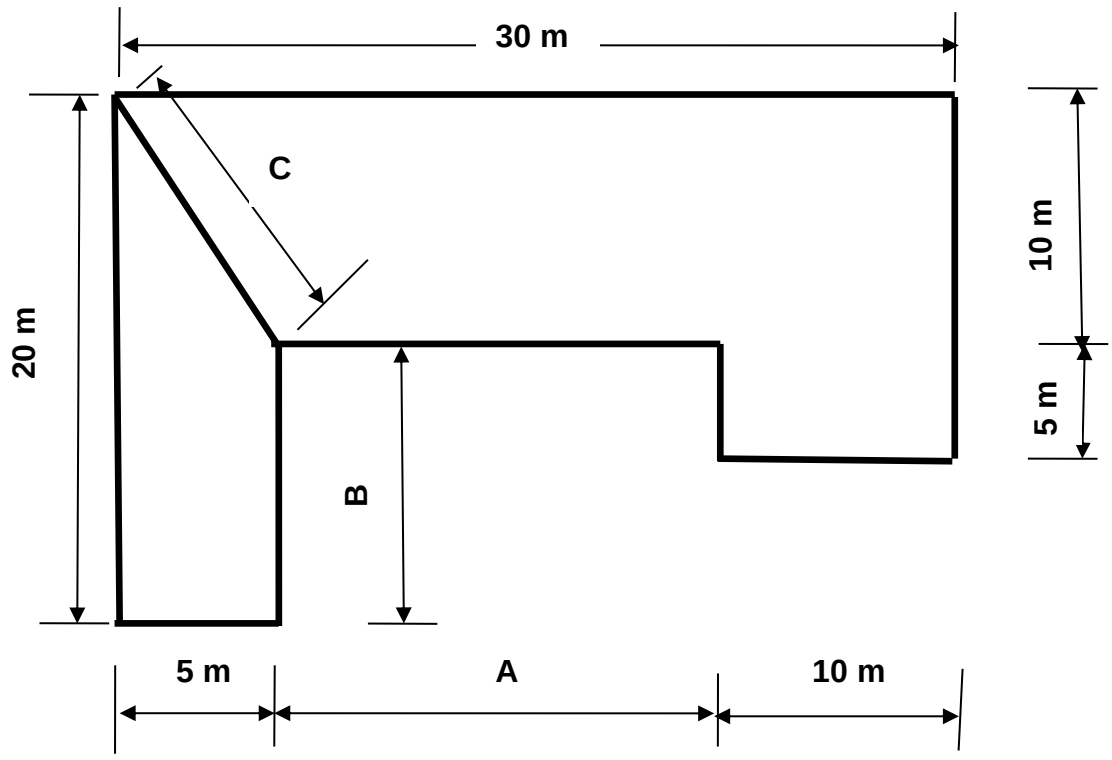

FIGURE 4

(5)
[15]

QUESTION 7

7.1 Differentiate between a *tie* and a *strut*. (2 × 2) (4)

7.2 Explain the difference between a *five-hinge* and a *four-hinge failure.* (2 × 2) (4)

7.3 State FOUR factors that influence the strength of a column. (4)

7.4 Draw a cantilever beam with a point load at the unfixed end and show where the tension and compression are. (5)

7.5 FIGURE 5 to FIGURE 8 show the vertical sections of through beams, column, I and L section. Reproduce the sections below and indicate the position of the neutral axis.

7.5.1

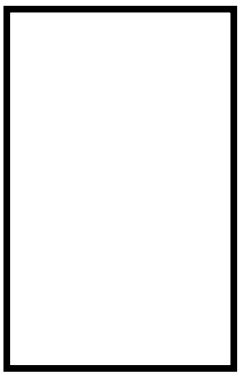

FIGURE 5

7.5.2

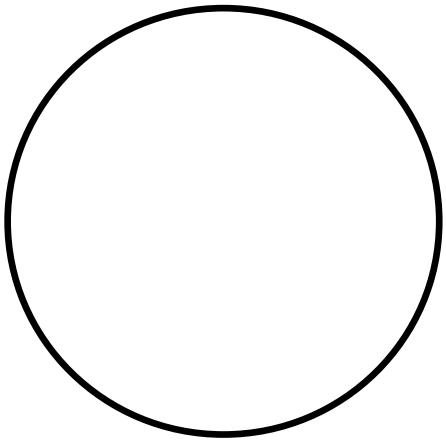

FIGURE 6

7.5.3

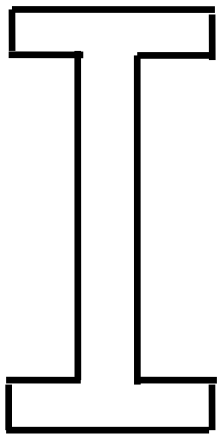

FIGURE 7

7.5.4

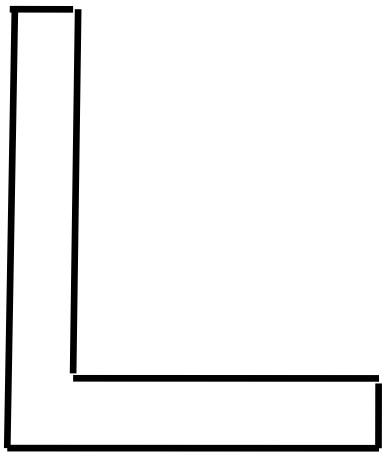

FIGURE 8

(4 × 2) (8)

[25]

TOTAL: 100

Copyright reserved