higher education & training

Department:
Higher Education and Training
REPUBLIC OF SOUTH AFRICA

NATIONAL CERTIFICATE

WELDERS' THEORY N2

(11022082)

28 November 2024 (X-paper)
09:00–12:00

Drawing instruments and nonprogrammable calculators may be used.

This question paper consists of 6 pages and 1 drawing sheet.

157Q1E2428

Copyright reserved

DEPARTMENT OF HIGHER EDUCATION AND TRAINING
REPUBLIC OF SOUTH AFRICA

NATIONAL CERTIFICATE
WELDERS' THEORY N2
TIME: 3 HOURS
MARKS: 100

INSTRUCTIONS AND INFORMATION

1. Answer all the questions.
2. Read all the questions carefully.
3. Number the answers according to the numbering system used in this question paper.
4. Use only a black or blue pen.
5. Drawings must be neat, clear and labelled where applicable. Use a pencil and drawing instruments.
6. Answer QUESTION 4 on the attached DRAWING SHEET. Write your EXAMINATION NUMBER in the spaces provided, detach it from the question paper and place it in the ANSWER BOOK.
7. Write neatly and legibly.

Copyright reserved

QUESTION 1

1.1 FIGURE 1 shows a box and pan folder. Name the parts indicated by writing only the answer next to the letter (A–F) in the ANSWER BOOK.

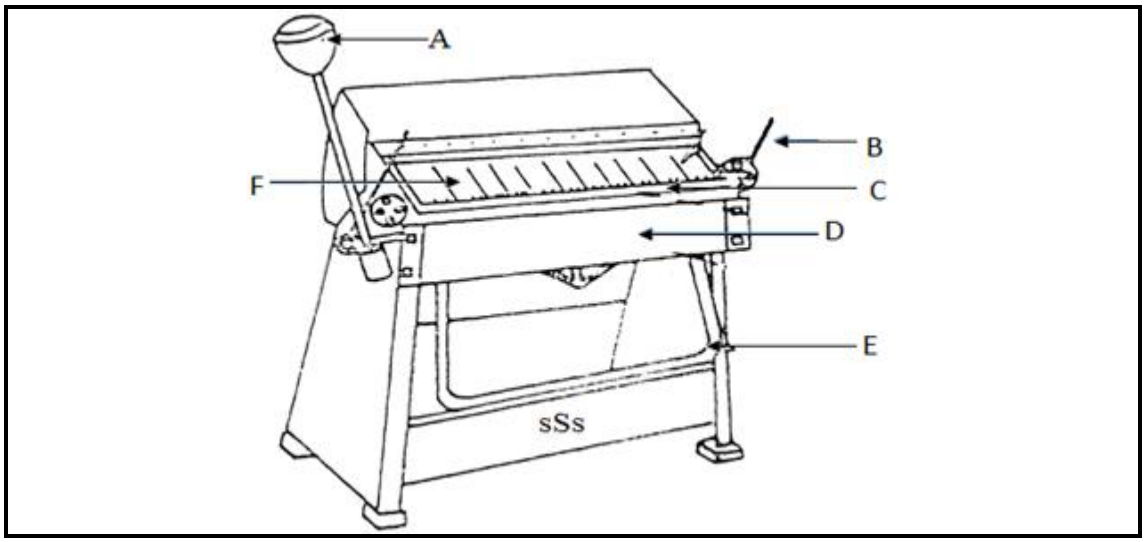

FIGURE 1

(6 × 1) (6)

1.2 State FOUR precautionary measures to be observed when working with a radial-arm drilling machine. (4)
[10]

QUESTION 2

2.1 Draw a neatly labelled diagram of an angle-to-angle welded joint of unequal angle iron sizes. (6)

2.2 What does the abbreviation RSJ stand for? (1)
[7]

QUESTION 3

3.1 Calculate the length of a 45º bend whose centre-to-face distance is 240mm. (6)

3.2 Name the tool that is used to mark an angle on a pipe. (2)
[8]

Copyright reserved

QUESTION 4

FIGURE 2 shows a right cone cut parallel to its base.

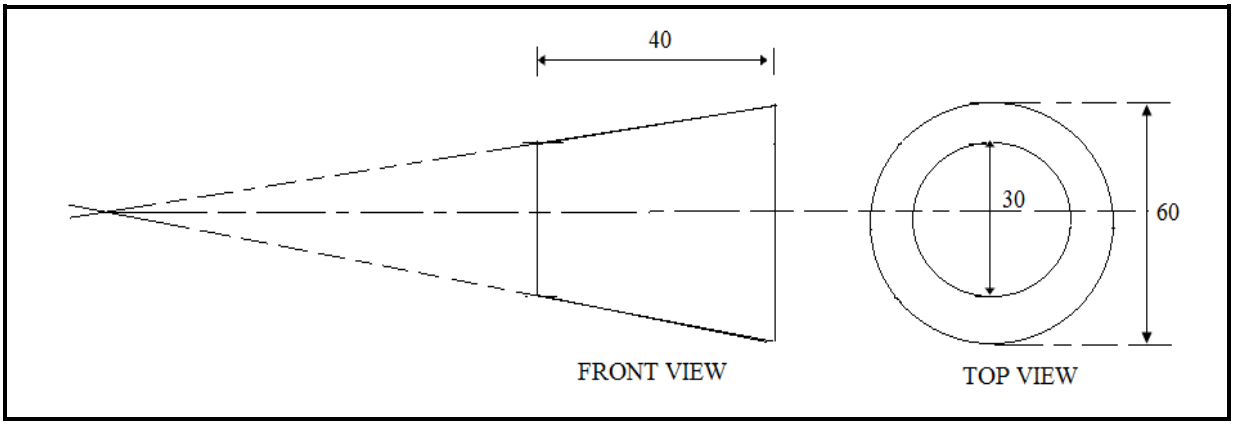

FIGURE 2

4.1 Draw the given views on the attached DRAWING SHEET. (3)

4.2 Use the radial-line method to develop the pattern of the right cone. (10)

Ensure the drawings are done neatly on the DRAWING SHEET (attached). (2)
[15]

QUESTION 5

Indicate whether each of the following statements are TRUE or FALSE by writing only 'True' or 'False' next to the question number (5.1–5.5) in the ANSWER BOOK.

5.1 A queen post is a horizontal member in roof trusses.

5.2 The ridge is the top point of the roof.

5.3 The slope of a roof is the ratio between the rise and the run.

5.4 A strut is a structural member that is placed to withstand a compressive force.

5.5 The tie beam of a roof truss is the member that spans the full length of the truss.

(5 × 1) **[5]**

QUESTION 6

6.1 Name FIVE types of non-ferrous metals. (5)

6.2 Name THREE types of cast iron. (3)

6.3 Name TWO forms of preheating. (2)

6.4 The Martensitic group is part of the types and grades of Stainless steels. State FIVE characteristics of the Martensitic group. (5)

[15]

QUESTION 7

7.1 FIGURE 3 shows a cross-sectional view of an acetylene cylinder. Name the parts indicated and write only the answer next to the letter (A–F) in the ANSWER BOOK.

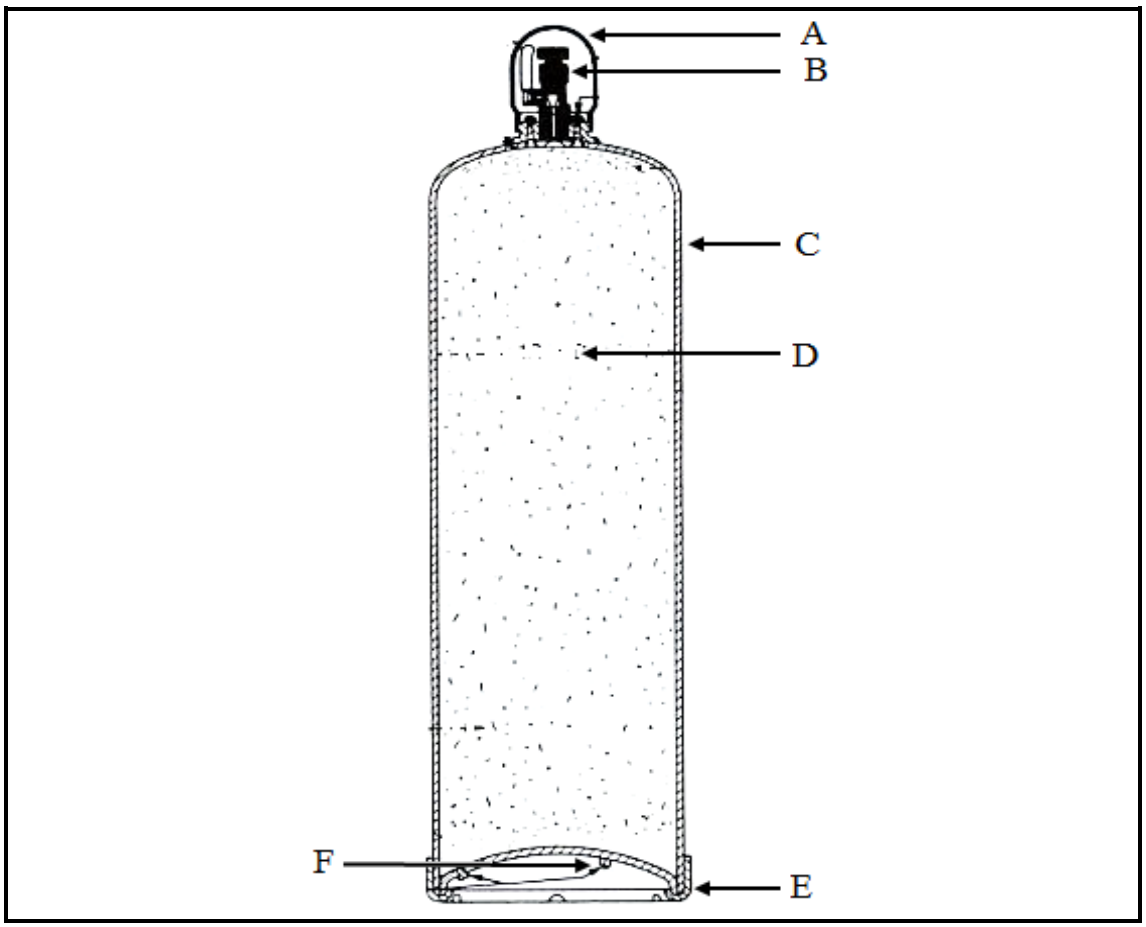

FIGURE 3

(6 × 1) (6)

7.2 Explain the operation of the low-pressure oxyacetylene welding system. (4)

7.3 Name the TWO types of profile cutting machines. (2)

[12]

Copyright reserved

QUESTION 8

8.1 Name FIVE components that make up the metal inert gas (MIG) system. (5)

8.2 State the difference between *preheating* and *postheating*. (2 × 2) (4)

8.3 Draw a neatly labelled diagram showing the shielded metal arc welding (SMAW) process.

Show the electrode wire, electrode, shielding gas, slag, solidified metal and molten metal. (6)
[15]

QUESTION 9

Name FIVE welding defects that X-ray testing can detect. (5 × 1) **[5]**

QUESTION 10

10.1 State FIVE factors to be considered before heat-treating steel. (5)

10.2 Name THREE case-hardening methods. (3)
[8]

TOTAL: 100

Copyright reserved

EXAMINATION NUMBER: | | | | | | | | | | | | |

DRAWING SHEET

QUESTION 4

Copyright reserved