higher education & training

Department:
Higher Education and Training
REPUBLIC OF SOUTH AFRICA

NATIONAL CERTIFICATE

REFRIGERATION TRADE THEORY N3

(11041583)

28 November 2024 (X-paper)
09:00–12:00

Nonprogrammable calculators may be used.

This question paper consists of 6 pages and a formula sheet of 8 pages.

153Q1E2428

Copyright reserved

DEPARTMENT OF HIGHER EDUCATION AND TRAINING
REPUBLIC OF SOUTH AFRICA

NATIONAL CERTIFICATE
REFRIGERATION TRADE THEORY N3
TIME: 3 HOURS
MARKS: 100

INSTRUCTIONS AND INFORMATION

1. Answer all the questions.
2. Read all the questions carefully.
3. Number the answers according to the numbering system used in this question paper.
4. Use only a black or blue pen.
5. Write neatly and legibly.

Copyright reserved

QUESTION 1

1.1 Briefly explain each of the following terms:

1.1.1 Saturated vapour

1.1.2 Super-heated vapour

1.1.3 Specific heat capacity of a substance

(3 × 2) (6)

1.2 Explain the term *miscellaneous heat load as applied in* refrigeration and give at least three examples in your explanation. (5)

1.3 State FIVE factors on which the heat transfer potential of a condenser depends. (5)

1.4 What is the process called when a substance evaporates directly from the solid or frozen phase to vapour without an intermediate stage? (1)

1.5 List THREE factors that determine the capacity of an evaporative condenser. (3)

[20]

QUESTION 2

2.1

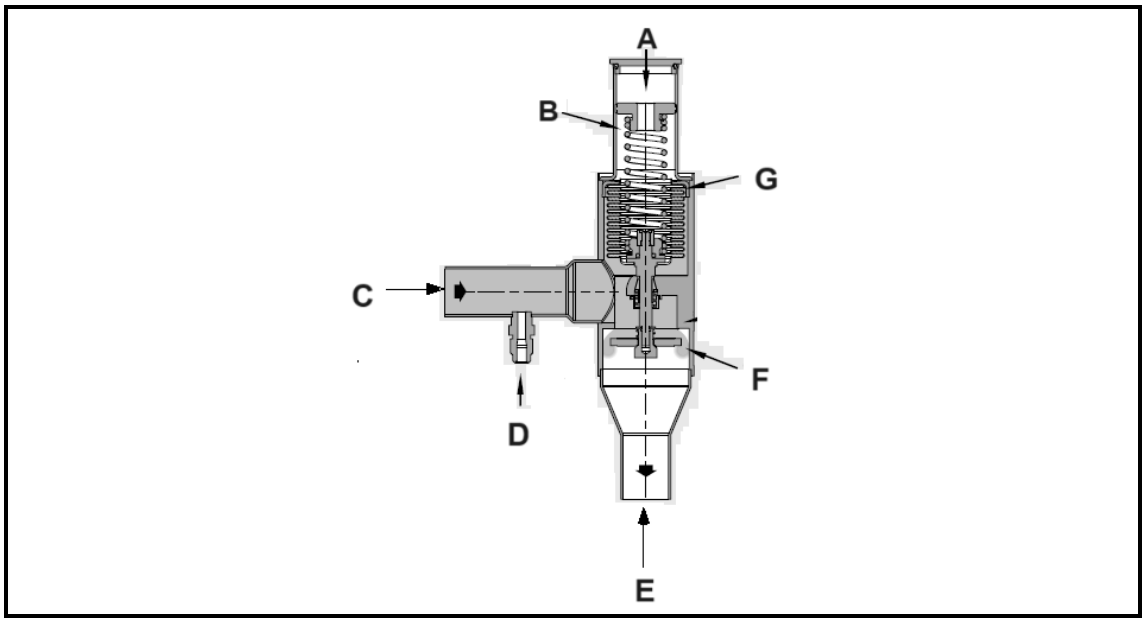

FIGURE 1

2.1.1 Name the type of control device shown in FIGURE 1. (1)

2.1.2 Label the parts of the device by writing only the answer next to the letter (A–G) in the ANSWER BOOK. (7 × 1) (7)

2.1.3 Between which TWO components will the control device be installed? (2)

Copyright reserved

2.2 Explain each of the following control terms:

2.2.1 Sensor (3)

2.2.2 Actuator (2)

2.3 An eight-cylinder compressor rotating at 10 revolutions per second has a bore of 70 mm and a stroke of 80 mm. The compressor was tested and was found to deliver refrigerant at a rate of 0,0225 m^3/s.

Calculate the volumetric efficiency of the compressor. (5)
[20]

QUESTION 3

3.1 Tabulate the FIVE main differences between a *compression system* and an *absorption system* as applied in refrigeration. (5)

3.2 Explain the term *flash gas* as it occurs in a refrigeration system. (3)

3.3 Briefly explain the main purpose of vibration absorbers and give the installation location in a refrigeration system. (2 × 2) (4)

3.4 What happens when a capillary tube in a refrigeration system is too short? (3)

3.5 The refrigerant-enthalpy gain in the evaporator is 140 kJ/kg. The coefficient of performance of a refrigeration plant is 4,8 and the cooling capacity is 55 kW.

Calculate:

3.5.1 The refrigerant mass flow rate in kg/s.

3.5.2 The work done in the compressor in kJ/kg.

(2 × 2) (4)

3.6 As the refrigerant circulates through the system, it passes through a number of changes.

Which ONE of the following states the incorrect circulation?

A Evaporator: Evaporation at constant pressure
B Compressor: Constant pressure and temperature
C Condenser: Condensing at constant pressure and temperature
D Expansion valve: Pressure and temperature decrease (1)
[20]

Copyright reserved

QUESTION 4

4.1 Moving parts in a mechanical refrigeration system must be lubricated with oil to ensure a long life and efficient performance.

Choose a description from COLUMN B that matches an item in COLUMN A. Write only the letter (A–G) next to the question number (4.1.1–4.1.7) in the ANSWER BOOK.

COLUMN A		COLUMN B	
4.1.1	Low viscosity	A	moisture contributes to formation of sludge and acids, deposits of copper on bearings
4.1.2	Good chemical stability		
4.1.3	Good thermal stability	B	should not form hard carbon deposits at hot spots in the compressor
4.1.4	Low wax contents		
4.1.5	Low pour point	C	measurement of resistance to the passage of electric current
4.1.6	Dryness	D	ability of oil to maintain good oiling properties
4.1.7	Dielectric strength		
		E	no or little chemical reaction with the refrigerant or materials found in a system
		F	helps prevent lubricant thickening in cold temperatures
		G	ability of oil to remain in a fluid state

(7 × 1) (7)

4.2 State the FOUR basic functions of refrigerant oils. (4)

4.3 Give the THREE possible causes of the following condition and state the corrective measures to be taken:

A compressor starts, but does not switch off a start winding. (3 × 2) (6)

4.4 Name each of the following components used in a refrigeration system:

4.4.1



4.4.2



4.4.3



(3 × 1) (3)
[20]

QUESTION 5

5.1 Name THREE types of evaporators used in a refrigeration plant. (3)

5.2 Explain the operating principle of a flooded evaporator. (6)

5.3 Briefly describe a screw compressor. (3)

5.4 State FIVE important points to consider when installing refrigerant piping. (5)

5.5 The air circulation in a cold room is distributed over a coil.

Explain this statement. (2)

5.6 Name ONE room in a plant locker. (1)
[20]

TOTAL: 100

Copyright reserved

FORMULA SHEET

1. Density = $\frac{mass}{volume} \therefore \rho = \frac{m}{v}$ kg/m^3

   also $\rho = \frac{1}{\upsilon}$ kg/m^3 (υ = specific volume)

2. Specific volume $(\upsilon) = \frac{1}{density} = \frac{1}{\rho}$ m^3/kg

3. Greek symbols: η = Efficiency (eta)
   ρ = Density (rho)

4. Mass flow rate $\left(\overset{\circ}{m}\right)$:

   $\overset{\circ}{m} = \overset{\circ}{V} \times \rho$ kg/s OR $\overset{\circ}{m} = \overset{\circ}{V} \times \frac{1}{\upsilon} \therefore \overset{\circ}{m} = \frac{\overset{\circ}{V}}{\upsilon}$ kg/s

5. Quantity of heat (Q):

   (for a change in temperature):
   $Q = m\,C\Delta\,T$ kJ

   (For a change of phase)
   Q = m.hfg
   (hfg = latent heat required)

   When the heat transfer rate is required, the formula changes to:
   $\overset{\circ}{Q} = \overset{\circ}{m}.hfg$ kJ/s or kW

6. Specific enthalpy (h):

   To calculate the total energy transfer:
   $\overset{\circ}{Q} = \overset{\circ}{m}\Delta h$ kJ/s or kW

7. Boyle's law:

   $P_1V_1 = P_2V_2$ (at constant temperature)

8. Charles' law:

   $\frac{V_1}{T_1} = \frac{V_2}{T_2}$ (at constant pressure)

Copyright reserved

9. Ideal gas law:

$$\frac{P_1V_1}{T_1} = \frac{P_2V_2}{T_2}$$

10. Gas constant (R):

$$R = \frac{P\upsilon}{T} \text{ J/kg.K}$$

11. Compressor efficiency = $\frac{Actual\ displacement\ (V)}{Theoretical\ displacement\ (Vp)}$

$$\eta = \frac{V}{Vp} \times \frac{100}{1} = \%$$

12. Theoretical displacement:

$$Vp = \frac{\pi \times D^2 \times L \times n \times N}{4} \text{ m}^3\text{/min} \qquad OR = \frac{\pi \times D^2 \times s \times N \times R}{4} \text{ m}^3\text{/min}$$

NOTE: (π = 3,142)

13. Evaporator capacity:

(a) Quantity of sensible heat transferred in watts (evaporator sensible capacity) $\left(\overset{\circ}{Q}\right)$:

$$\overset{\circ}{Q} = U \,.\, A \,.\, \Delta t \text{ watts}$$

(b) Overall heat transfer coefficient (U-factor):

$$U = \frac{1}{R} \text{ W/m}^2\text{.°C}$$

(c) Resistance of surface to heat flow (R):

$$R = \frac{1}{U} = \frac{1}{ho} + \frac{x}{k} + \left(\frac{Ao}{A_1} \times \frac{1}{h_1}\right) \text{ m}^2\text{.°C/W}$$

(d) Log mean temperature difference (LMTD):

$$\text{LMTD} = \frac{(te - tr) - (t\ell - tr)}{Log\ n\left(\frac{te - tr}{t\ell - tr}\right)} \text{ °C}$$

Copyright reserved

14. Condenser load:

(a) Total heat rejection of condenser in kW (THR):

THR = $\overset{\circ}{Q}e + \overset{\circ}{Q}i$ kW

Also THR = refrigeration capacity × heat rejection factor

(b) Condenser capacity $\left(\overset{\circ}{Q}\right)$:

$\overset{\circ}{Q} = U \,.\, A \,.\, \Delta t$ kW

(c) LMTD = $\dfrac{(tr - t\ell) - (tr - te)}{Log\ n\left(\dfrac{tr - t\ell}{tr - te}\right)}$

15. The pressure enthalpy diagram:

(a) Refrigerating effect (Re):

Re = $h_1 - h_4$ kJ/kg

(b) Heat of compression (WD):

WD = $h_2 - h_1$ kJ/kg

(c) Heat rejection (THR):

THR = $h_2 - h_3$ kJ/kg

(d) Coefficient of performance (COP):

COP = $\dfrac{\text{Re}}{\text{WD}}$ (cooling)

COP = $\dfrac{\text{THR}}{\text{WD}}$ (heat pump)

(e) Refrigerant mass flow $\left(\overset{\circ}{m}\right)$:

$\overset{\circ}{m} = \dfrac{Load}{\text{Re}}$ kg/s

Copyright reserved

(f) Plant capacity = $\dot{m} \times \text{Re}$ kW

(g) Theoretical power = $\dot{m} \times WD$ kW

(h) Actual power = $\frac{\dot{m} \times WD}{\eta}$ kW

(i) Total heat rejection in kW (THR):

THR in kW = $\dot{m}$ × THR in kJ/kg kW

(j) Efficiency of a compressor:

$$\% = \frac{\text{Theoretical power input}}{\text{Actual power input}} \times 100$$

OR

$$\% = \frac{h_2 - h_1}{h_2^1 - h_1} \times 100$$

16. Cooling load calculations:

(a) Basic heat transfer formula:

$\dot{Q} = U \,.\, A \,.\, \Delta T$ watts (J/s)

(b) To calculate total resistance against heat flow:

$$Rt = \frac{1}{h_o} + \frac{d_1}{k_1} + \frac{d_2}{k_2} ... + \frac{1}{h_i} \text{ m}^2.^\circ\text{C/W}$$

(c) Heat transfer coefficient (U):

$$\text{U} = \frac{1}{R_t} \text{ W/m}^2.^\circ\text{C}$$

(d) Resistance against heat flow (R):

$$\text{R} = \frac{d}{k} \text{ m}^2.^\circ\text{C/W}$$

(e) Total air change in a cold room $\left(\dot{V}\right)$:

$$\dot{V} = \frac{V \times f}{86\,400} \text{ m}^3\text{/s}$$

Copyright reserved

(f) Total air change load $\left(\overset{\circ}{Q}\right)$:

(i) $\overset{\circ}{Q} = \overset{\circ}{V} \times \rho \times (h_2 - h_1) \times 1\,000 \text{ watts}$

or when using the table for the number of air changes:

(ii) $\overset{\circ}{Q} = \dfrac{V \times f \times \rho \times \Delta h}{86{,}4}$ watts

The above formula is the combination of the two formulae given in (e) and (f)(i).

(g) Product load:

(i) Sensible heat:

$$\overset{\circ}{Q} = \frac{\overset{\circ}{m} . C . \Delta t}{86{,}4} \text{ watts}$$

(ii) Latent heat:

$$\overset{\circ}{Q} = \frac{\overset{\circ}{m}\, \Delta h}{86{,}4} \text{ watts}$$

(iii) Heat respiration:

$$\overset{\circ}{Q} = \overset{\circ}{m}\, \Delta h \quad \text{watts}$$

(h) Miscellaneous loads:

(i) $Equipment\ load = \dfrac{Equipment\ output \times hours\ of\ operation}{24}\ watts$

NB: Load and output must be given in watts.

(ii) $Lighting\ load = \dfrac{Wattage\ of\ lighting \times hours\ of\ operation}{24}\ watts$

NB: When lighting is by means of fluorescent lights, add 25% to the lighting load.

(iii) Occupancy load:

$$\overset{o}{Q} = \frac{Heat\ equivalent\ per\ person \times number\ of\ persons \times hours}{24}\ watts$$

Copyright reserved

17. Ventilation and air conditioning:

(a) Removal of latent heat:

$$\overset{\circ}{Q} = \overset{\circ}{m} \times \Delta g \times hfg \text{ kW}$$

$$\overset{\circ}{m} = \frac{\overset{\circ}{V}}{\upsilon} \text{ kg/s}$$

$$\therefore \overset{\circ}{Q} = \frac{\overset{\circ}{V} \times \Delta g \times hfg}{\upsilon} \text{ kW}$$

(b) Room sensible heat factor (RSHF):

$$\text{RSHF} = \frac{RSH}{RSH + RLH} = \frac{RSH}{RTH}$$

(c) Efficiency of an evaporative cooler:

$$\eta = \frac{ta - tc}{ta - tb}$$

(d) Cooling and dehumidification:

$$\overset{\circ}{Q} = \overset{\circ}{m} \left[\Delta h - hfg\left(\Delta g\right)\right] \text{ kW}$$

(e) $\overset{\circ}{V}$ of the return air:

$$\overset{\circ}{V}ra = \overset{\circ}{V}ra - \overset{\circ}{V}fa \ m^3/s$$

(f) Air temperature of mixture in front of coil:

$$T = \frac{\left(\overset{\circ}{v}fa \times tdbfa\right) + \left(\overset{\circ}{v}ra \times tdbra\right)}{\overset{\circ}{V}sa} \ ^\circ\text{C}$$

(g) Quantity of air:

$$\overset{\circ}{V} = \frac{\overset{\circ}{Q}}{C \times \rho \times \Delta t} \text{ m}^3\text{/s}$$

Copyright reserved

(h) Amount of air forced through an opening by wind:

$$\dot{V} = E \times A \times \upsilon \text{ m}^3/\text{s}$$

(i) Volume flow due to temperature difference:

$$\dot{V} = kA\sqrt{h\,(\Delta t)} \text{ m}^3/\text{s}$$

(j) Air changes per hour (f):

$$\text{f} = \frac{\dot{V} \times 3\,600}{V} \text{ changes/hour}$$

(k) Volume airflow per m^2 opening:

$$\dot{V} = \frac{\dot{V}}{A} \text{ m}^3/\text{s}/\text{m}^2$$

(l) Free area of an opening (A):

$$\text{A} = \text{total area} \times \eta \text{ m}^2$$

(m) Louvre size for given air speed:

$$= \frac{\dot{V} \times 100}{Number\ of\ \ inlets \times inlet\ speed \times \%A} \text{ m}^2$$

18. Fans:

(a) Fan total pressure (Pt)

$$\text{Pt} = \text{Ps} + \text{Pv kPa}$$

(b) Theoretical power of the fan:

$$\dot{V} \times Pt \quad \text{kW}$$

(c) True power of the fan:

$$\frac{\dot{V} \times Pt}{\eta} \text{ kW}$$

Copyright reserved

(d) Air power (Ap):

$$\text{Ap} = \frac{\overset{\circ}{Q} \times Pt}{N} \text{ kW}$$

(e) Brake power (Bp):

$$Bp = \frac{\overset{\circ}{Q} \times Pt}{\eta t} = \frac{\overset{\circ}{Q} \times Ps}{\eta s}$$

$$\therefore Bp = \frac{Pt}{\eta t} = \frac{Ps}{\eta s} \text{ (for the same volume)}$$

19. Fan laws:

(a) $$\frac{VOL_1}{VOL_2} = \frac{N_1}{N_2} \times \frac{(DIA_1)^3}{(DIA_2)^3}$$

(b) $$\frac{P_1}{P_2} = \frac{(N_1)^2}{(N_2)^2} \times \frac{(DIA_1)^2}{(DIA_2)^2} \times \frac{\rho_1}{\rho_2}$$

(c) $$\frac{kW_1}{kW_2} = \frac{(N_1)^3}{(N_2)^3} \times \frac{(DIA_1)^5}{(DIA_2)^5} \times \frac{\rho_1}{\rho_2}$$

$$\frac{(DIA_1)}{(DIA_2)} = \frac{N_2}{N_1}$$

Copyright reserved