higher education & training

Department:
Higher Education and Training
REPUBLIC OF SOUTH AFRICA

NATIONAL CERTIFICATE

RADIO THEORY N3

(11040873)

28 November 2024 (X-paper)
09:00–12:00

Scientific calculators and drawing instruments may be used.

This question paper consists of 6 pages and 1 formula sheet.

151Q1E2428

Copyright reserved

DEPARTMENT OF HIGHER EDUCATION AND TRAINING
REPUBLIC OF SOUTH AFRICA

NATIONAL CERTIFICATE
RADIO THEORY N3
TIME: 3 HOURS
MARKS: 100

INSTRUCTIONS AND INFORMATION

1. Answer all the questions.
2. Read all the questions carefully.
3. Number the answers according to the numbering system used in this question paper.
4. Use only a black or blue pen.
5. Write neatly and legibly.

Copyright reserved

QUESTION 1

Indicate whether the following statements are TRUE or FALSE by writing only 'True' or 'False' next to the question number (1.1–1.10) in the ANSWER BOOK.

1.1 A directional antenna is obtained by decreasing the radiation in the direction of the director.

1.2 The RF stages provide most of the gain in the receiver.

1.3 An operational amplifier used as a differentiator uses resistors in both the input and feedback loop (path).

1.4 The amplitude of the modulation signal determines the percentage modulation.

1.5 In double-sideband transmission, both sidebands as well as the carrier frequency, are transmitted.

1.6 A fast recording speed results in a good frequency response of the magnetic tape.

1.7 During the night, ionisation increases because some electrons and ions combine.

1.8 The capstan drive makes use of a spindle to control the length of tape per second and ensure a very constant drive.

1.9 The Yagi antenna consists of a log periodic antenna as the main transmitting element.

1.10 Frequency modulation produces the better signal-to-noise ratio.

(10 × 1) **[10]**

QUESTION 2

Choose a description from COLUMN B that matches a term in COLUMN A. Write only the letter (A–L) next to the question number (2.1–2.10) in the ANSWER BOOK.

COLUMN A		COLUMN B	
2.1	Ganging	A	refers to a range of frequencies
2.2	Decibels	B	also called direct waves
2.3	polarization	C	type of antenna
2.4	bandwidth	D	minimising fading
2.5	90°	E	applies to the oscillator and RF stages.
2.6	flywheel	F	direction of the "E"-lines
2.7	Rhombic	G	angle between the E and H fields
2.8	Space waves	H	gain of an audio amplifier
2.9	IF	I	is attached to the capstan
2.10	AGC	J	frequency of 455kHz
		K	also called indirect waves
		L	maximises fading

(10 × 1) **[10]**

QUESTION 3

3.1 A sweep signal generator is most suitable for application to stages where tuned circuits are involved. Name FOUR signals produced by a sweep signal generator. (4)

3.2 An oscilloscope is an instrument that can display the shape of a waveform. An oscilloscope displays the peak to peak of an AC signal that covers 6 vertical divisions and 5 horizontal divisions from start of the cycle to the end. The volts/division control is set to 5 V/division and the time/division control is set to3 µs.

Calculate the following:

3.2.1 Peak-to-peak voltage (2)

3.2.2 The frequency of the waveform (4)

[10]

Copyright reserved

QUESTION 4

Op-amps are too weak to drive speakers.

Draw a circuit diagram of a transistor push-pull audio output amplifier coupled to a single integrated pre-amplifier and a speaker on the output. Negative feedback must be included in your diagram. **[10]**

QUESTION 5

5.1 Draw a neat circuit diagram of the tuned circuit of a Colpitts oscillator. (3)

5.2 Calculate the voltage gain in dB if an amplifier has the following information.

Input power = 2 W
Input current = 0.4 A
Output impedance = 25 Ω
Output power = 100 W (7)

[10]

QUESTION 6

6.1 Draw a neat, labeled block diagram showing how test instruments are connected for tracking adjustment. (6)

6.2 Briefly describe the operation of a Reactance modulator/oscillator in a FM transmitter. (4)

[10]

QUESTION 7

Explain, with reference to an AM Superheterodyne receiver block diagram, the functions of the following stages:

7.1 Antenna

7.2 RF amplifier

7.3 Local oscillator

7.4 Detector

7.5 AF amplifier

(5 × 2) **[10]**

QUESTION 8

8.1 With reference to the SSB transmitter, briefly describe the application of the sideband filter. (2)

8.2 Briefly describe Frequency-Shift-Keying (FSK) as used in radio telegraphy. (4)

8.3 The CCITT-2 code is a code for digital data transmission. What does the abbreviation CCITT-2 stand for? (4)
[10]

QUESTION 9

9.1 Draw the following antennas:

9.1.1 Half-wave dipole (2)

9.1.2 Rhombus (3)

9.2 Briefly describe the difference between the radiation pattern of a vertical dipole ground plane antenna and a multi-element Yagi antenna (4)

9.3 State the definition of an *antenna.* (1)
[10]

QUESTION 10

10.1 Study the diagram below of the electrical sections of a tape recorder and write the label of the numbers marked 1 - 8 in your ANSWER BOOK.

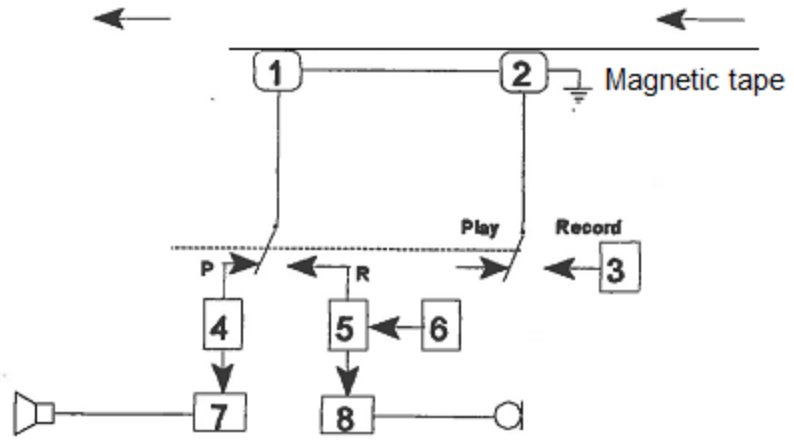

(8)

10.2 Describe the advantages of using AC bias to DC bias in a tape recorder. (2)
[10]

TOTAL: 100

Copyright reserved

(11040873)

RADIO THEORY N3

FORMULA SHEET

$V = I \times R$	$R_T = R_1 + R_2$
$\frac{1}{R_T} = \frac{1}{R_1} + \frac{1}{R_2}$	$P = V \times I$
$P = I^2 \times R$	$P = \frac{V^2}{R}$
$N = 10\log \frac{P_0}{P_1}$	$N = 20\log \frac{I_0}{I_1} + 10\log \frac{R_0}{R_1}$
$N = 20\log \frac{V_0}{V_1} + 10\log \frac{R_1}{R_0}$	
$N = 20\log \frac{I_0}{I_1}$	$N = 20\log \frac{V_0}{V_1} \quad R_1 = R_0$
$\frac{Vo}{Vin} = \frac{R_f}{R_{in}}$	$V_o = V_{in} \frac{R_f}{R_{in}}$
$\frac{Vo}{Vin} = \frac{R_f}{R_{in}} + 1$	$V_o = V_{in} (\frac{R_{in} + R_f}{R_{in}})$

Copyright reserved