higher education & training

Department:
Higher Education and Training
REPUBLIC OF SOUTH AFRICA

NATIONAL CERTIFICATE:
MULTI-DISCIPLINARY DRAWING OFFICE PRACTICE

PICTORIAL DRAUGHTING N4

(8090214)

27 November 2024 (X-paper)
09:00–13:00

CLOSED-BOOK EXAMINATION

REQUIREMENTS: ONE sheet A4 draughting film or Gateway tracing paper
ONE sheet A2 drawing paper

Drawing instruments and non-programmable calculators may be used

This question paper consists of 4 pages, 5 diagram sheet and 1 formula sheet.

136Q1E2427

Copyright reserved

DEPARTMENT OF HIGHER EDUCATION AND TRAINING
REPUBLIC OF SOUTH AFRICA

NATIONAL CERTIFICATE:
MULTI-DISCIPLINARY DRAWING OFFICE PRACTICE
PICTORIAL DRAUGHTING N4
TIME: 4 HOURS
MARKS: 100

INSTRUCTIONS AND INFORMATION

1. Answer all the questions.

2. Read all the questions carefully.

3. Use both sides of the drawing paper and answer QUESTION 1, 2 and 3 on the FRONT of the A2 drawing sheet, QUESTION 4 and 5 on the reverse of the A2 drawing sheet and QUESTION 6 on the draughting film supplied.

4. A balanced layout is very important, and candidates will be penalised for poor planning.

5. A 15 mm border must be drawn around the drawing sheet (on both sides).

6. The question numbers must be clearly indicated.

7 All drawing work including candidate information must be completed in pencil on the A2 drawing paper and in DRAUGHTING INK on the A4 draughting film.

8. All drawing work must comply with the SANS 0111-1990 CODE OF PRACTICE.

9 On completion, fold the A2 sheet to A3 size with the examination number visible on the front. The draughting film must be placed inside the folded A2 sheet. No staples are to be used.

10. Use your own discretion for dimensions not given.

11. Use a 3 mm fillet radius for all radii not given.

12. Work neatly.

Copyright reserved

QUESTION 1: FREEHAND DRAWING

FIGURE 1, DIAGRAM SHEET 1 (attached), shows a single view drawing of a VW motor car emblem.

By using only a pencil and eraser (no ruler or compass) draw a freehand drawing of the emblem to approximately one and a half times the given dimensions. (12)

Add all the dimensions to the completed drawing and place a suitable title and scale centred beneath the layout. (2)

SCALE 1,5:1

[14]

QUESTION 2: TWO-POINT PERSPECTIVE DRAWING

FIGURE 2, DIAGRAM SHEET 2 (attached), shows two views of a support block in first-angle orthographic projection. Draw to scale 1:1, by using the measure point method, a two-point perspective drawing of the support block. Point A is situated on the ground line (GL) in line with the centre of vision (CV) and up against the picture plane (PP). Line AB vanishes to the right at 45º. The distance of the eye in front of the picture plane (PP) is 130 mm and the height of the eye above the ground line (GL) is 100 mm. (16)

Show all the necessary points on the construction, for example CV, VPs, et cetera. (4)

[20]

QUESTION 3: ISOMETRIC PROJECTION

FIGURE 3, DIAGRAM SHEET 3 (attached) shows three views of a support in third-angle orthographic projection.

Do not copy the given views but construct a suitable isometric scale. (2)

Draw an isometric projection of the support. (18)

Do not show any hidden detail. Do not insert any dimensions.

[20]

Copyright reserved

QUESTION 4: SQUARE THREAD CONSTRUCTION

FIGURE 4, DIAGRAM SHEET 4 (attached) shows a mild steel turnbuckle with a left-handed square thread on the left side marked A and on the right side is a right-hand square thread.

Do not copy the given drawing, but draw according to scale 4:1, to show two full left-handed turns of the square thread marked 'A' only.

The two turns of the thread must be clearly marked '1' and '2' on the right side of the completed drawing layout.

The drawing must be in a vertical position. Show all construction lines on the drawing
Do not show any hidden detail or calculations.

[14]

QUESTION 5: GEAR TEETH CONSTRUCTION

Use an approximation method to draw the involute profile of three teeth of a spur gear.

The rest of the gear must be drawn according to the conventional representation.

GEAR DATA:

Pitch-circle diameter	= 110 mm	
Number of teeth	= 20	
Hole diameter	= 30 mm (keyway detail must be shown)	(10)

Show all construction lines and calculations on the drawing paper. (4)

[14]

QUESTION 6: INK DRAWING

FIGURE 5, DIAGRAM SHEET 5 (attached) shows 3 views of a locating fixture in first-angle orthographic projection.

Draw, with ink pens, according to scale 1:1 an outside front view and a full-sectional left view on Y-Y of the locating fixture. The drawing must be drawn on the tracing paper in landscape format. (15)

Use only draughting pens or pigment ink pens.
No ball point pens are to be used. (3)
Use your own discretion for dimensions not given.
Insert any four dimensions on the completed drawing, 2 on the front view and 2 on the sectional view.

[18]

TOTAL: 100

Copyright reserved

DIAGRAM SHEET 1: FREEHAND DRAWING

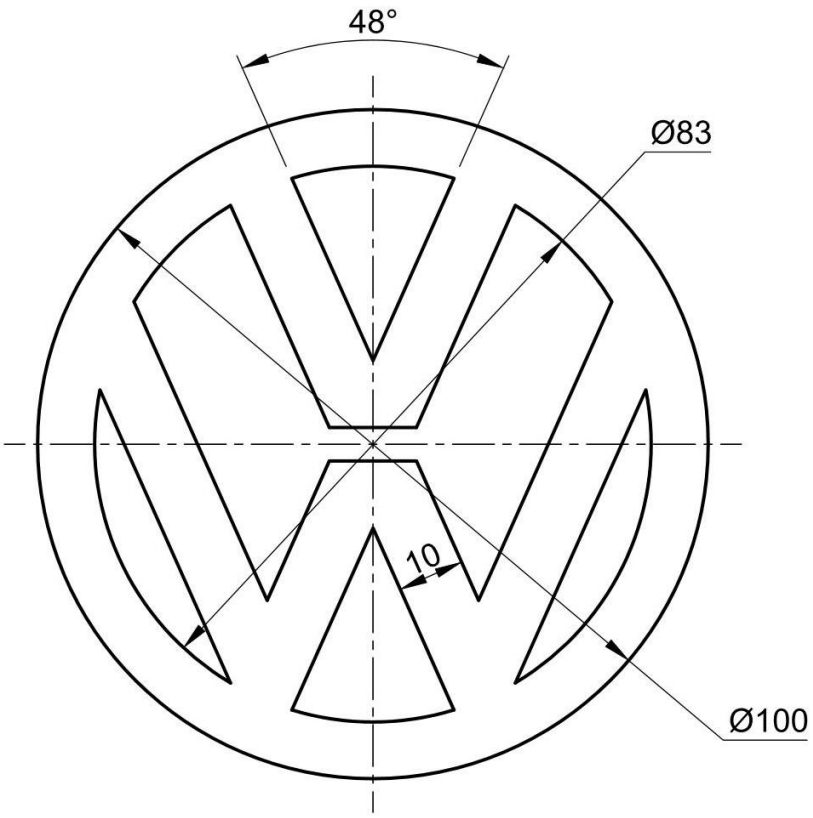

Copyright reserved

DIAGRAM SHEET 2: TWO-POINT PERSPECTIVE

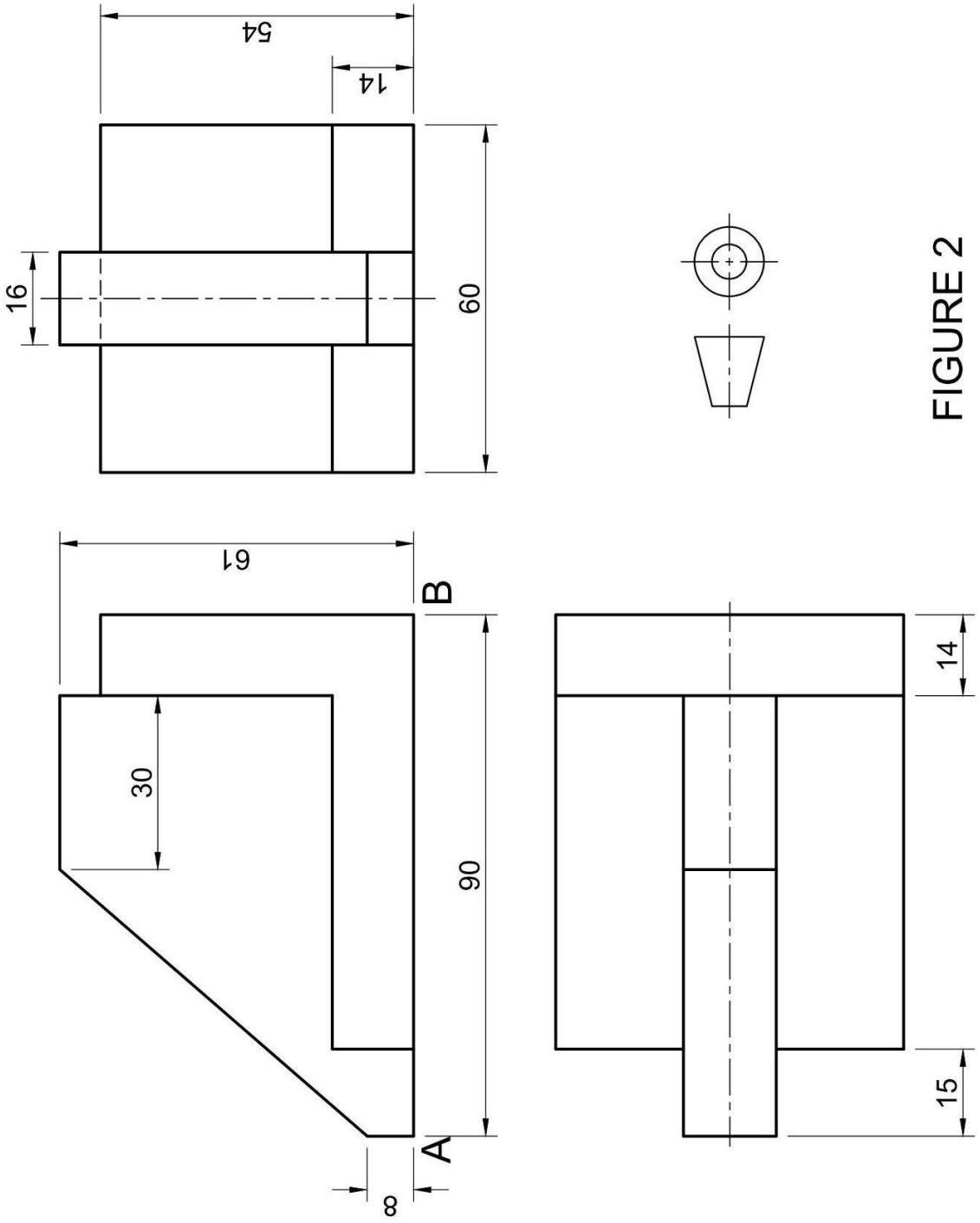

FIGURE 2

DIAGRAM SHEET 3: ISOMETRIC PROJECTION

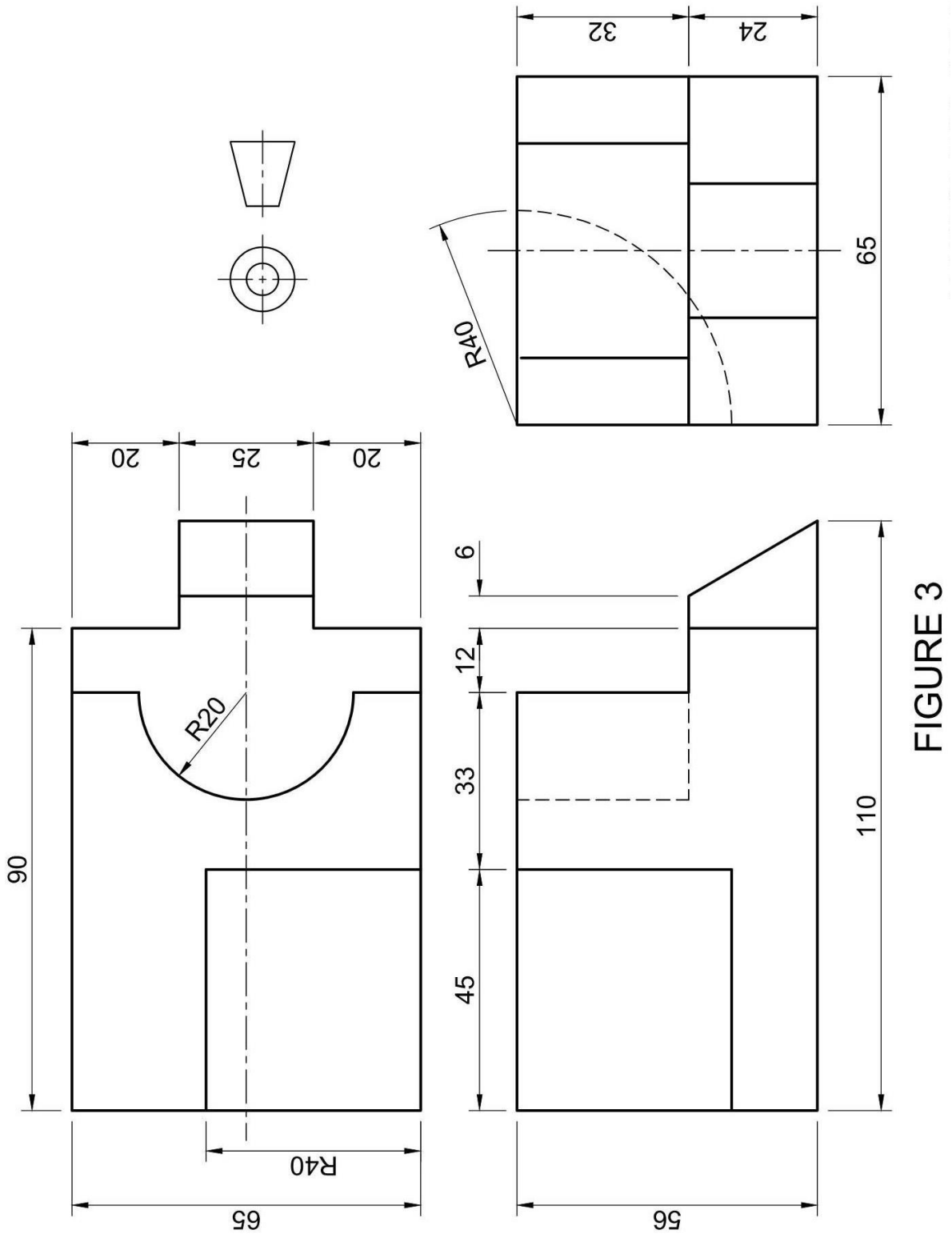

FIGURE 3

DIAGRAM SHEET 4: SQAURE THREAD CONSTRUCTION

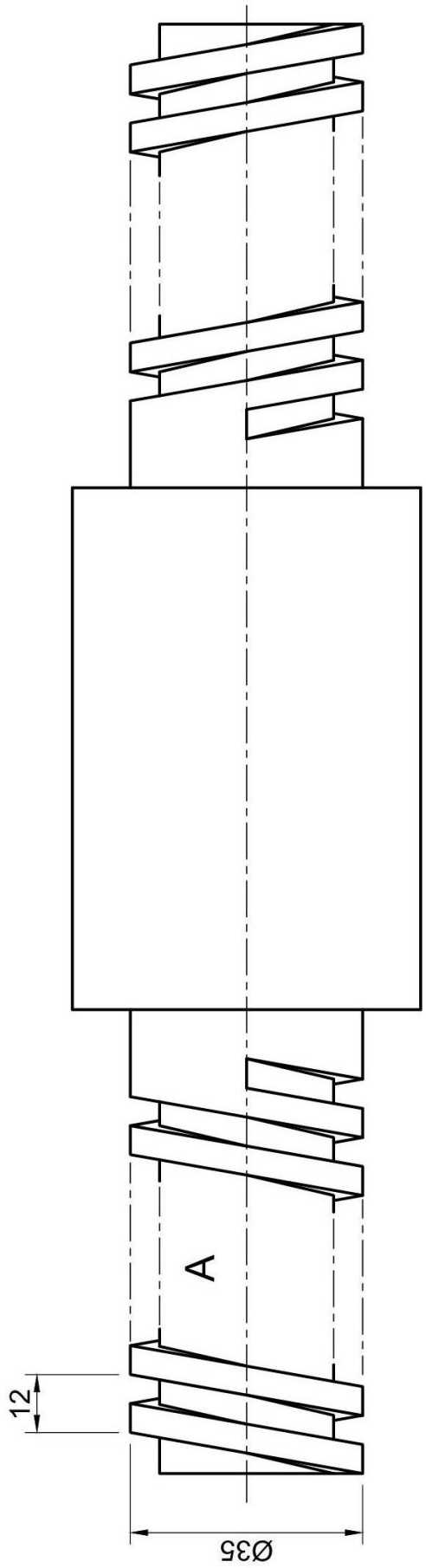

FIGURE 4

Copyright reserved

DIAGRAM SHEET 5: INK DRAWING

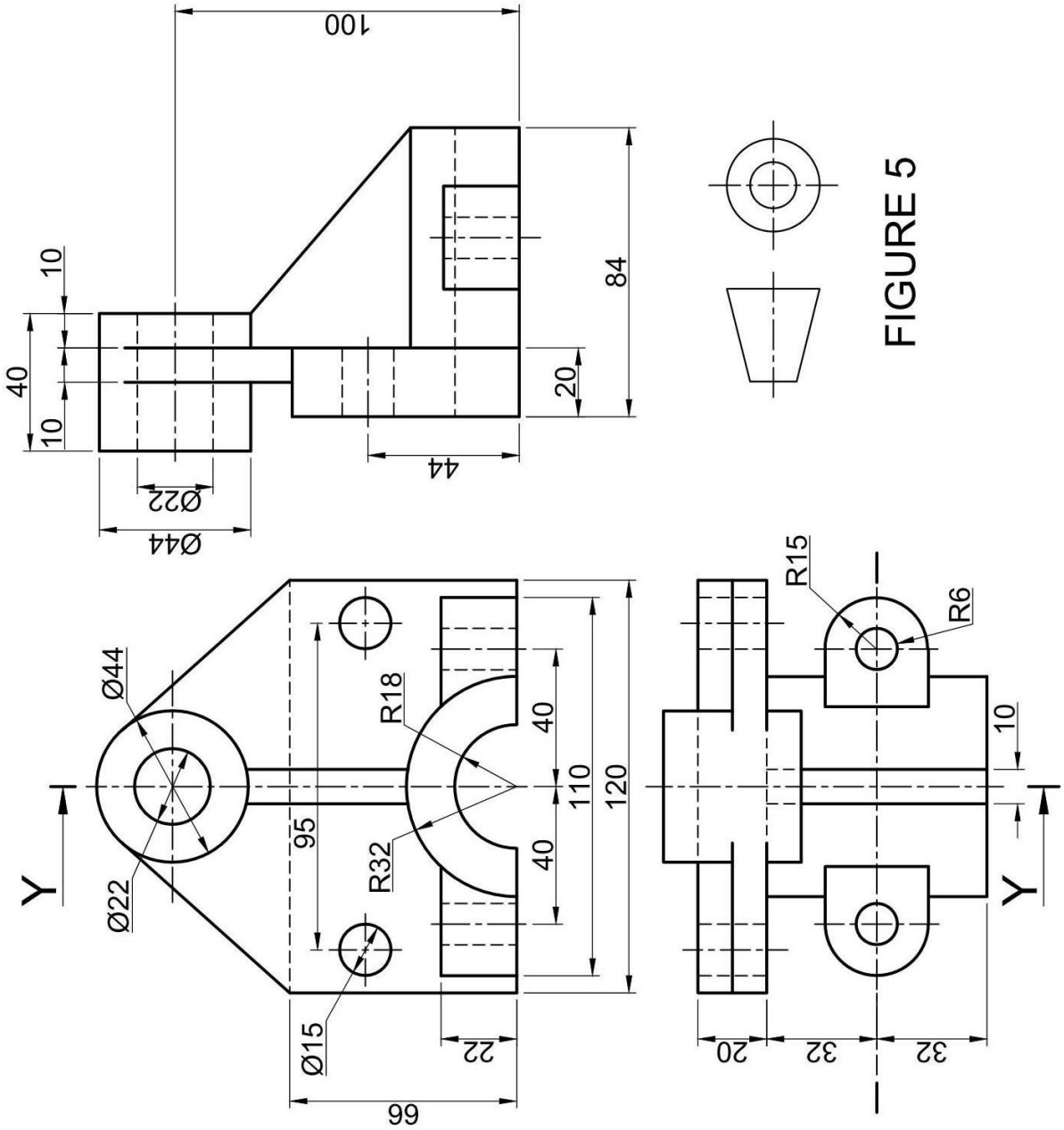

FIGURE 5

Copyright reserved

PICTORIAL DRAUGHTING N4

FORMULA SHEET

1. SCREW-THREAD CONSTRUCTION

   Length = (pitch × number of turns) + pitch/2

   Pitch divisions = pitch/12

2. GEAR TEETH CONSTRUCTION

   Module = addendum

   Dedendum = 1,25 × module

   PCD = module × number of teeth

   Fillet radius = 0,3 × module

   Circular pitch = 3,142 × module

3. SQUARE SPRING CONSTRUCTION

   Length = (lead × number of turns) + material thickness

Copyright reserved