higher education & training

Department:
Higher Education and Training
REPUBLIC OF SOUTH AFRICA

NATIONAL CERTIFICATE

MOTOR TRADE THEORY N3

(11040673)

27 November 2024 (X-paper)
09:00–12:00

Drawing instruments and non-programmable calculators may be used.

This question paper consists of 5 pages.

134Q1E2427

Copyright reserved

DEPARTMENT OF HIGHER EDUCATION AND TRAINING
REPUBLIC OF SOUTH AFRICA

NATIONAL CERTIFICATE
MOTOR TRADE THEORY N3
TIME: 3 HOURS
MARKS: 100

INSTRUCTIONS AND INFORMATION

1. Answer all the questions.
2. Read all the questions carefully.
3. Number the answers according to the numbering system used in this question paper.
4. Use only a black or blue pen.
5. Write neatly and legibly.
6. $V = \frac{\pi}{4} \times d^2 \times h$

Copyright reserved

QUESTION 1

1.1 A cylinder has a diameter of 65 mm and a height of 74 mm.

Calculate the volume of the cylinder in cm^3. (4)

1.2 Briefly explain how the firing order of an engine is determined. (2)

1.3 Draw a neat labelled sketch to illustrate and explain the concept, *compression ratio*. This sketch should clearly indicate the swept volume and clearance volume within the cylinder. (7)

1.4 State the *law of inertia*. (2)

1.5 Describe the operation of a *turbo waste gate*. (5)

1.6 Name the components of the variable cam timing labelled in FIGURE 1 below. Write only the answer next to the question number (1.6.1−1.6.6) in the ANSWER BOOK.

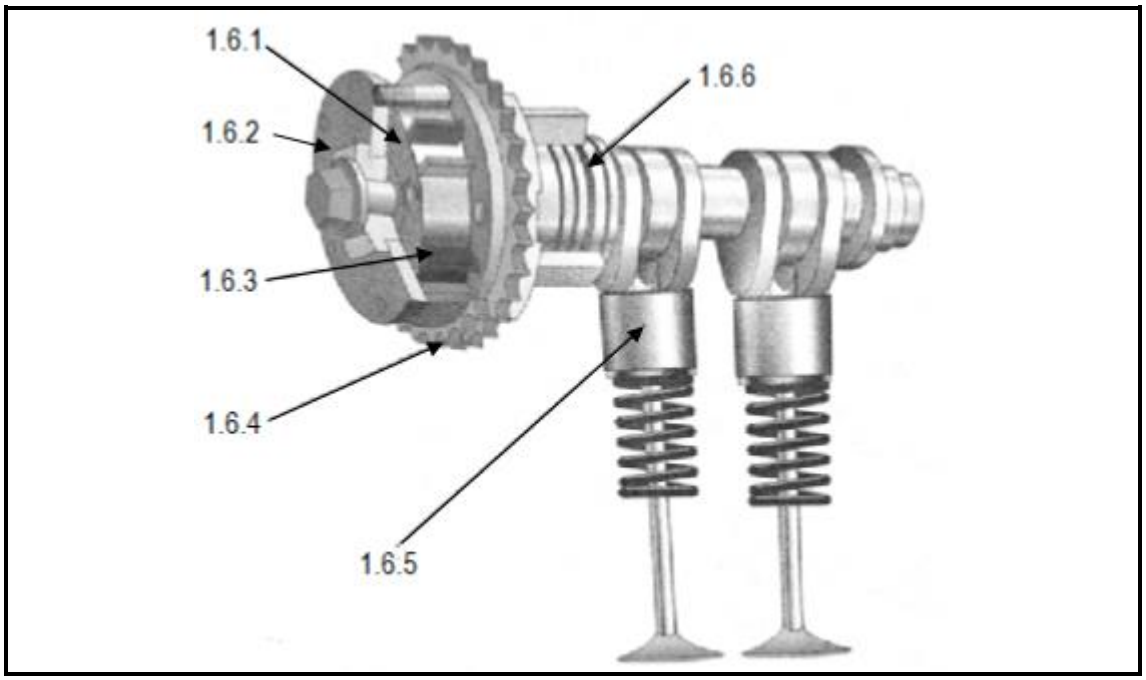

FIGURE 1 (6)

1.7 Four camshaft locations are used in internal combustion engines. List these locations from old to new. (4)

[30]

QUESTION 2

2.1 Explain the operating principle of the continuous fuel injection system according to academic standards. (3)

2.2 List SIX advantages of fuel injection over carburettor systems. (6)

2.3 When diagnosing modern EFI system problems, it is important to understand the four main problem groups. These groups encompass various issues related to the EFI system.

List the FOUR main problem groups. (4)

2.4 Describe the operation of a capacitor-discharge transistor ignition system, from the closing of the ignition switch to the point of spark. (5)

2.5 Explain the function of a crankshaft position sensor in a modern ignition system. (2)

2.6 List THREE possible locations of a crankshaft position sensor on a modern engine. (3)

2.7 Discuss the operation of the fluid coupling at high and low rotational speeds. (5)

[28]

QUESTION 3

3.1 Name the components of a three-speed automatic gearbox shown in FIGURE 2 below. Write only the answers next to the question number (3.1.1–3.1.10) in the ANSWER BOOK.

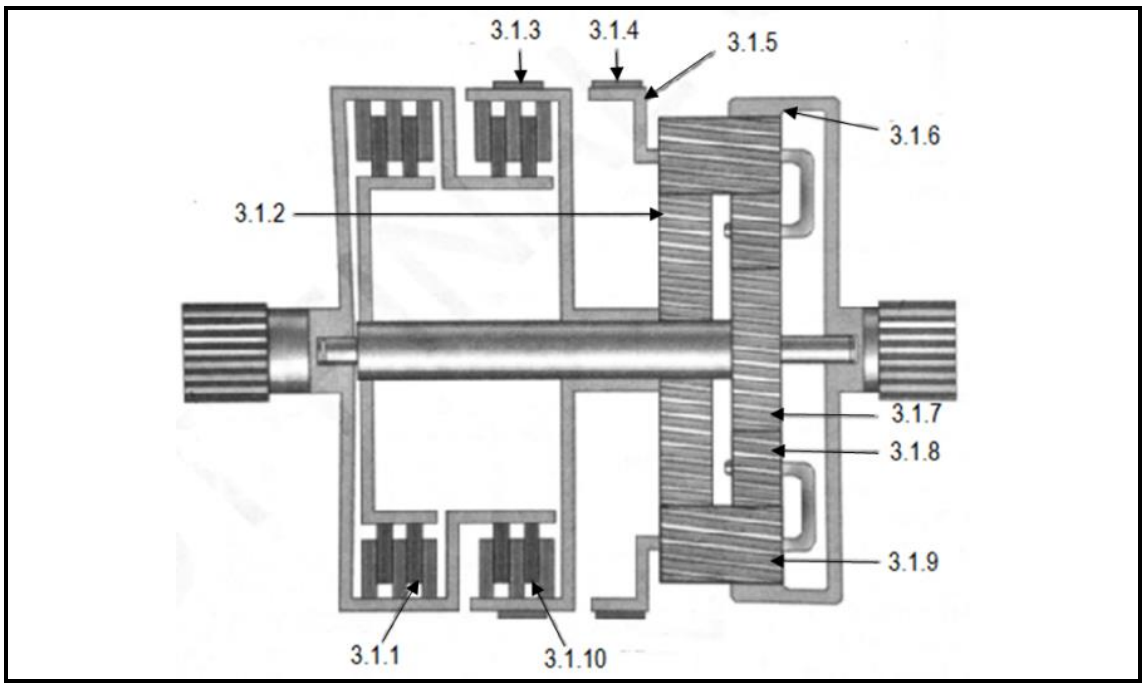

FIGURE 2 (10)

3.2 Various automatic transmissions are currently used in the industry. Name FIVE modern types of automatic transmissions. (5)

3.3 Explain the operation of a differential lock unit/system. (4)

3.4 Name the labelled components of a differential locking system in FIGURE 3 below. Write only the answer next to the question number (3.4.1–3.4.6) in the ANSWER BOOK.

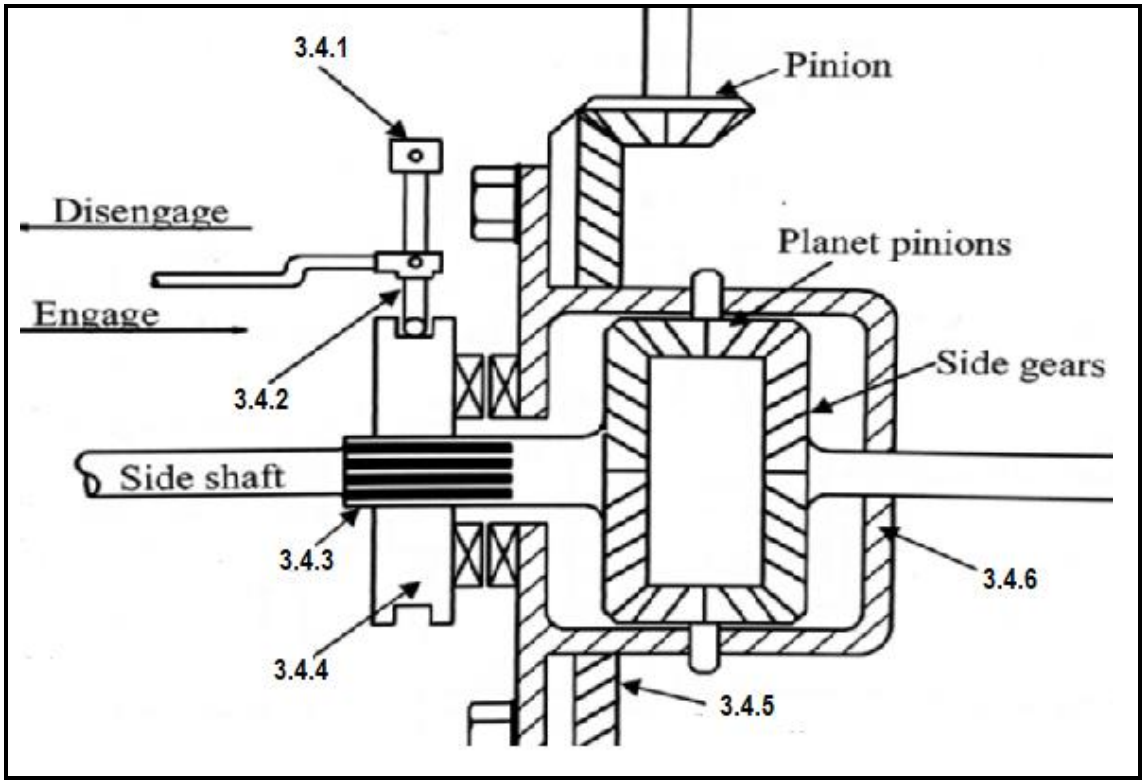

FIGURE 3

(6)
[25]

QUESTION 4

4.1 Compare the rotary valve of a hydraulic steering system to the torque sensor of an electric-assisted power steering. (7)

4.2 List FIVE types of fuel cells used on electric and hybrid vehicles. (5)

4.3 The engine management light is activated on a vehicle. On inspection, the following code shows on the diagnostic scanning tool: **P0016**.

Break down the code and indicate the description of each digit. (5)
[17]

TOTAL: 100

Copyright reserved