higher education & training

Department:
Higher Education and Training
REPUBLIC OF SOUTH AFRICA

NATIONAL CERTIFICATE (VOCATIONAL)

ELECTRONIC CONTROL AND DIGITAL ELECTRONICS
NQF LEVEL 3

(12041023)

13 November 2024 (X-paper)
09:00–12:00

This question paper consists of 7 pages.

129Q1N2413

Copyright reserved

DEPARTMENT OF HIGHER EDUCATION AND TRAINING
REPUBLIC OF SOUTH AFRICA

NATIONAL CERTIFICATE (VOCATIONAL)
ELECTRONIC CONTROL AND DIGITAL ELECTRONICS
NQF LEVEL 3
TIME: 3 HOURS
MARKS: 100

INSTRUCTIONS AND INFORMATION

1. Answer all the questions.
2. Read all the questions carefully.
3. Number the answers according to the numbering system used in this question paper.
4. Use only a black or blue pen.
5. Write neatly and legibly.

Copyright reserved

QUESTION 1: FUNDAMENTALS OF ELECTRONICS

1.1 Indicate whether the following statements are TRUE or FALSE by writing only 'True' or 'False' next to the question number (1.1.1–1.1.5) in the ANSWER BOOK.

1.1.1 An oscilloscope is used to display voltage vs time signals.

1.1.2 Voltmeters must be connected in parallel to the test points.

1.1.3 Signal generators amplify input sine wave signals.

1.1.4 The test probes of an ammeter must be connected across the test points.

1.1.5 An analogue meter must be calibrated before use.

(5 × 1) (5)

1.2 Current flow through elements is dependent on the energy gaps between the conduction and valance band. Differentiate how this affects current flow through the following elements:

1.2.1 Insulator

1.2.2 Conductor

1.2.3 Semiconductor

(3 × 1) (3)

1.3 Choose a term from COLUMN B that matches a description in COLUMN A. Write only the letter (A–F) next to the question number (1.3.1–1.3.5) in the ANSWER BOOK.

COLUMN A		COLUMN B	
1.3.1	Activated by light	A	Zener diode
1.3.2	Acts as a variable capacitor	B	tunnel diode
1.3.3	Immediate forward bias	C	varactor diode
1.3.4	Voltage reference circuits	D	light-emitting diode
1.3.5	Used in domestic lighting	E	photo diode
		F	LCD

(5 × 1) (5)

1.4 The common base amplifier circuit is designed as one of three amplifier configurations, each with specific characteristics.

Describe FOUR characteristics of the common base amplifier. (4)

Copyright reserved

1.5 1.5.1 Identify FOUR of the key electronic components that are used in any AC to DC power supply circuit.

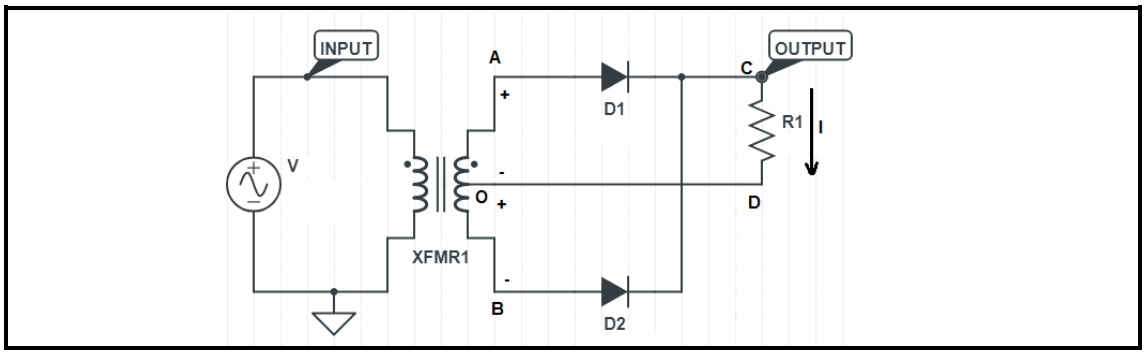

FIGURE 1

(4)

1.5.2 FIGURE 1 above shows a power supply circuit.

Identify the circuit type and explain how it uses this type of transformer and diodes to convert AC to DC. (5)

1.6 1.6.1 Choose the correct term from those in brackets and write it next to the question number (a–e) in the ANSWER BOOK.

(a) A non-biased J-FET has a (channel/depletion region) between the source and drain leads.

(b) The (base/gate) lead controls the amount of current that flows through the channel.

(c) The biasing (voltage/current) adjusts the channel opening or closing.

(d) The junction is configured as (reverse/forward) bias.

(e) The N-channel J-FET is used as a control of (hole/electron) current.

(5 × 1) (5)

1.6.2 Sketch the labelled IEC symbol of the N-channel J-FET. (3)

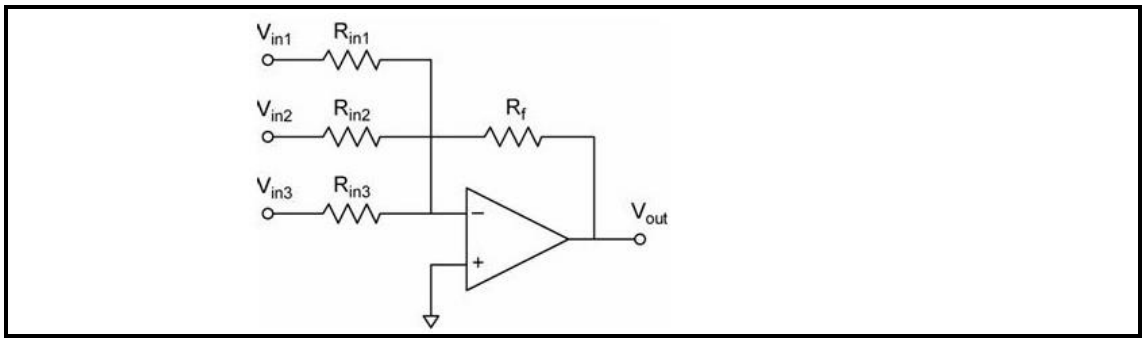

FIGURE 2

1.7 1.7.1 Identify the application circuit of the operational amplifier in FIGURE 2 above.

1.7.2 What is the phase difference between *input signals* and *output signals*?

1.7.3 Why is there a need for resistor R_f in this circuit?

1.7.4 Explain the reason for the three input voltages V1, V2 and V3.

1.7.5 Where are these circuit applications commonly used?

1.7.6 What is an advantage of using this operational amplifier IC instead of transistors?

(6 × 1) (6)
[40]

QUESTION 2: DIGITAL ELECTRONICS

2.1 Convert the following as indicated:

2.1.1 11111_2 to decimal

2.1.2 $E9_{16}$ to binary

2.1.3 213_{10} to octal

(3 × 3) (9)

2.2 Do the following calculations:

2.2.1 $10011_2 – 110_2$

2.2.2 $111_2 \times 10_2$

2.2.3 $11101_2 + 1110_2$

(3 × 3) (9)

2.3 2.3.1 Discuss the basic construction or design of a decade counter. (3)

2.3.2 Why you would design an asynchronous counter instead of a synchronous counter circuit? (1)

2.3.3 Identify the detailed type of counter circuit in FIGURE 3 below.

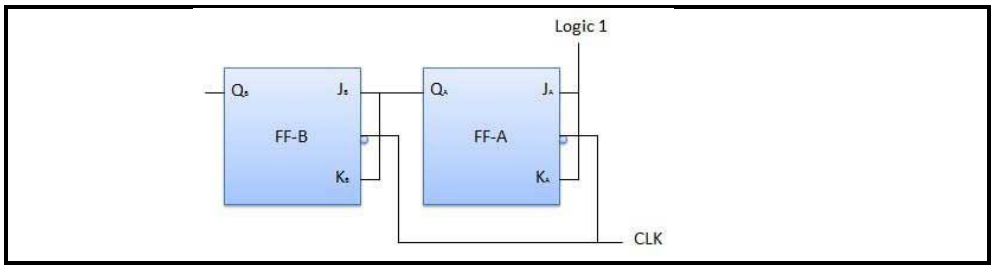

FIGURE 3

(3)
[25]

QUESTION 3: PERSONAL COMPUTERS

3.1 Identify FIVE components (hardware) or types of memory used in the running of a personal computer. (5)

3.2 What precautions should a technician take when repairing faults inside the tower? (2)

3.3 Explain the steps you would use to troubleshoot a faulty mouse that is not responding. (3)

3.4 A user complains that his games run slow on his computer. Describe how a technician would remove and replace the RAM modules on the motherboard. (5)
[15]

QUESTION 4: TRANSDUCERS

4.1 List THREE factors that must be considered when selecting a transducer for monitoring an industrial process. (3)

4.2 Discuss the function of a transducer in closed-loop system. (2)

4.3 Discuss the basic working principles of an inductive transducer. (3)

4.4 List TWO applications where inductive transducers are used. (2)
[10]

QUESTION 5: PROGRAMMABLE LOGIC CONTROLLERS (PLCs)

5.1 Explain why a PLC system is called a *feedback process*. (2)

5.2 What are the THREE uses of a programming device of a PLC system? (3)

5.3 Design a ladder diagram that has two NO contacts (A and B) in the OR configuration, starting a control relay (C) that needs to be latched.

An NC contact (D) is used to stop the process. (5)
[10]

TOTAL: 100

Copyright reserved