higher education & training

Department:
Higher Education and Training
REPUBLIC OF SOUTH AFRICA

# NATIONAL CERTIFICATE

# QUANTITY SURVEYING N4

(2050004)

**26 November 2024 (X-paper)**
**09:00–13:00**

**REQUIREMENTS:** **Dimension paper (OE 8/12)**
**Abstract paper (OE 8/10)**
**Billing paper (OE 8/11)**

**Nonprogrammable calculators and an unmarked copy of the *Standard System of Measuring Building Work* may be used**

**This question paper consists of 6 pages and a diagram sheet.**

126Q1E2426

Copyright reserved

# DEPARTMENT OF HIGHER EDUCATION AND TRAINING
# REPUBLIC OF SOUTH AFRICA

NATIONAL CERTIFICATE
QUANTITY SURVEYING N4
TIME: 4 HOURS
MARKS: 100

---

**INSTRUCTIONS AND INFORMATION**

1. Answer all the questions.
2. Read all the questions carefully.
3. Number the answers according to the numbering system used in this question paper.
4. SECTION A must be answered on the DIMENSION, ABSTRACT and BILLING PAPER.
5. SECTION B must be answered in the ANSWER BOOK.
6. The work must be answered according to the Standard System of Measuring Buildings Work in South Africa.
7. Do NOT use red or green pens.
8. Do NOT staple loose pages.
9. In QUESTION 1, the word "NIL" must be used on the DIMENSION PAPER.
10. Use only a black or blue pen.
11. Write neatly and legibly.

---

Copyright reserved 

## SECTION A

## QUESTION 1

Refer to the DIAGRAM SHEET (attached).
The roof plan and a section of an out-building are given.

SPECIFICATIONS:

Timber for trusses 114 mm x 38 mm pretreated South African Pine
Trusses spaced at 750 centres
114 mm × 38 mm wall plate
50 mm × 76 mm sawn purlins
76 mm × 76 mm wrought eave purlins
Corrugated fibre cement roof covering, adjustable ridge and ridge finial
32 mm × 220 mm Sawn South African Pine fascia and barge boards
Roof pitch 30º
Brick wall 220 mm thick

1.1 Measure the brickwork on the following items

| | | |
|---|---|---|
| 1.1.1 | Gable wall | (5) |
| 1.1.2 | Raking and cutting | (2) |
| 1.1.3 | Beam filling | (3) |
| 1.1.4 | Facings on beam filling side | (2) |

1.2 Measure the timber on the following:

| | | |
|---|---|---|
| 1.2.1 | Wall plate | (2) |
| 1.2.2 | Calculate the length of purlins | (2) |
| 1.2.3 | Take off the purlins | (2) |
| 1.2.4 | Take off eaves purlins | (2) |

1.3 Measure the following under the pre-treated trusses

| | | |
|---|---|---|
| 1.3.1 | Calculate the number of trusses | (5) |
| 1.3.2 | Take off the queen post, king post, struts | (7) |
| 1.3.3 | Take off rafter, cutting on rafter and hoop iron | (5) |
| 1.3.4 | Tie beam | (3) |

**[40]**

Copyright reserved 

**QUESTION 2**

Do the working up stages in MASONRY items only:

2.1 Squaring (3)

2.2 Abstracting (3)

2.3 Billing (4)

**[10]**

**TOTAL SECTION A: 50**

**SECTION B**

**QUESTION 3**

3.1 State the unit of measurement for the following quantity surveying terms:

3.1.1 Back filling

3.1.2 Cornice

3.1.3 Skirting

3.1.4 Paint

3.1.5 Hard core filling

(5 × 1) (5)

3.2 Write out the following abbreviations in full:

3.2.1 a.b

3.2.2 appvd

3.2.3 c/l

3.2.4 fmwk

3.2.5 DPC

(5 × 1) (5)

**[10]**

Copyright reserved 

## QUESTION 4

4.1 Choose a term from COLUMN B that matches a description in COLUMN A. Write only the letter (A–G) next to the question number (4.1.1–4.1.5) in the ANSWER BOOK.

| COLUMN A | | COLUMN B | |
|---|---|---|---|
| 4.1.1 | Lumpsum amount of money included in the tender to cover the cost of unforeseen items that may occur during the execution of project works | A | taking off |
| | | B | measured net |
| | | C | variation order |
| 4.1.2 | Calculations written in the description column by the taker-off. They are an indication of how certain measurements that appear in the dimension column were established | D | contingencies |
| | | E | extra over |
| | | F | side cast |
| 4.1.3 | The work measured as in a fixed position with no allowance for waste, passing or laps | G | casting up |
| 4.1.4 | The process of identifying elements of construction work that can be measured and priced. It includes recording of dimensions and descriptions off all the labour and material items required for work | | |
| 4.1.5 | Some items are measured as extra over others, that is, they are not to be priced at the full value of all their labour and material, as these have to a certain extent already been measured | | |

(5 × 1) (5)

4.2 Define the following terms:

4.2.1 Ditto

4.2.2 Circular work

4.2.3 Measuring list

4.2.4 Taking off list

4.2.5 Interim money

(5 × 1) (5)
**[10]**

## QUESTION 5

5.1 Briefly describe the following quantity surveying document:

5.1.1 Bill of quantities

5.1.2 Specifications

5.1.3 Standard system of measuring building work

5.1.4 Condition of contract

5.1.5 Contract drawing

(5 × 2) (10)

5.2 Explain any FIVE purposes of Standard System of Measurement. (5 × 2) (10)

**[20]**

## QUESTION 6

One brick wall 17 500 mm long and 2 500 mm high, has to be built with bricks 220 mm × 110 mm × 75 mm in size and with a mortar mix ratio of 1:6. Thickness of the mortar between the bricks is 10 mm.

Calculate the following:

6.1 Sum of ratio (1)

6.2 Volume of wall (2)

6.3 Volume of bricks without mortar (2)

6.4 Volume of bricks with mortar (2)

6.5 Number of bricks (3)

**[10]**

**TOTAL SECTION B: 50**
**GRAND TOTAL: 100**

Copyright reserved

(2050015)

## DIAGRAM SHEET

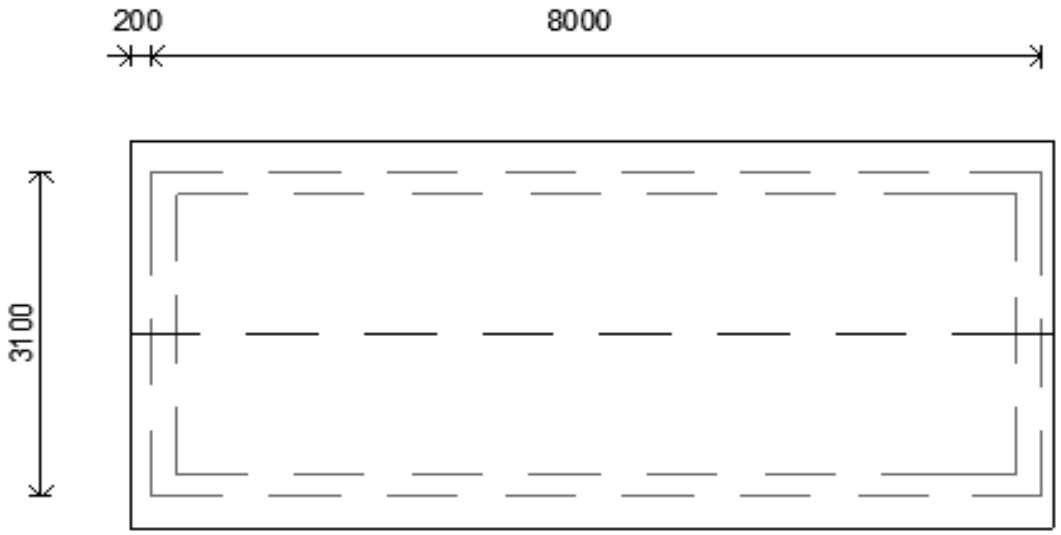


FLOOR PLAN

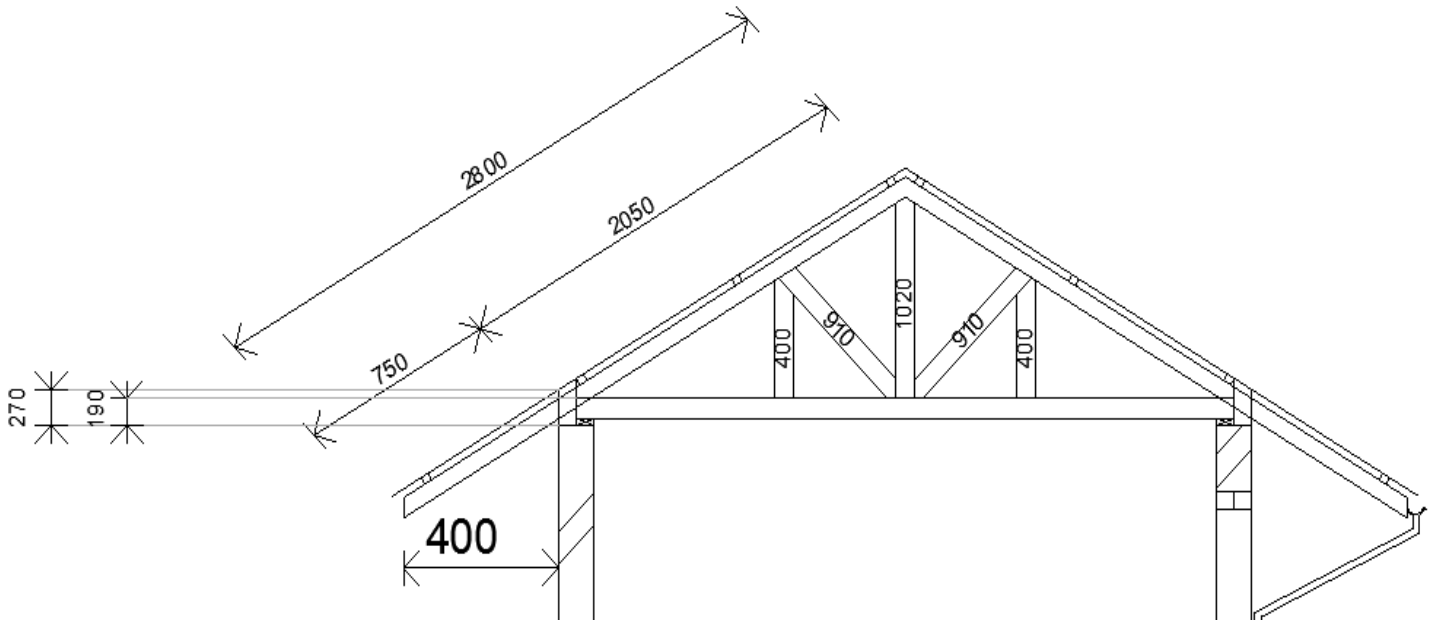


VERTICAL SECTION

Copyright reserved