higher education & training

Department:
Higher Education and Training
REPUBLIC OF SOUTH AFRICA

NATIONAL CERTIFICATE (VOCATIONAL)

CIVIL AND STRUCTURAL STEEL WORK DETAILING

NQF LEVEL 4

(Second paper)

(12050674)

13 November 2024 (X-paper)
09:00–11:00

REQUIREMENTS: **A4 drawing sheets**
Yellow cover folder (BOE 8/15)

CAD software, calculators and drawing instruments may be used.

This question paper consists of 5 pages.

125Q2N2413

Copyright reserved

DEPARTMENT OF HIGHER EDUCATION AND TRAINING
REPUBLIC OF SOUTH AFRICA

NATIONAL CERTIFICATE (VOCATIONAL)
CIVIL AND STRUCTURAL STEEL WORK DETAILING
NQF LEVEL 4
(Second paper)
TIME: 2 HOURS
MARKS: 75

INSTRUCTIONS AND INFORMATION

1. Answer all the questions.
2. Read all the questions carefully.
3. Number the answers according to the numbering system used in this question paper.
4. Work neatly and legibly.

Copyright reserved

QUESTION 1

A pile cap of 1,9 m square × 0,6 m deep rests on 400 mm diameter concrete piles, 100 mm from the ends of the pile cap which supports a 500 mm × 400 mm rectangular column, in line with the centre length of the pile cap.

Redraw, using CAD, to scale 1:10, the vertical sectional view through the piles, the pile cap and the columns.

Indicate all the dimensions and reinforcements as in FIGURE 1 below and use your discretion for dimensions and or reinforcements not given.

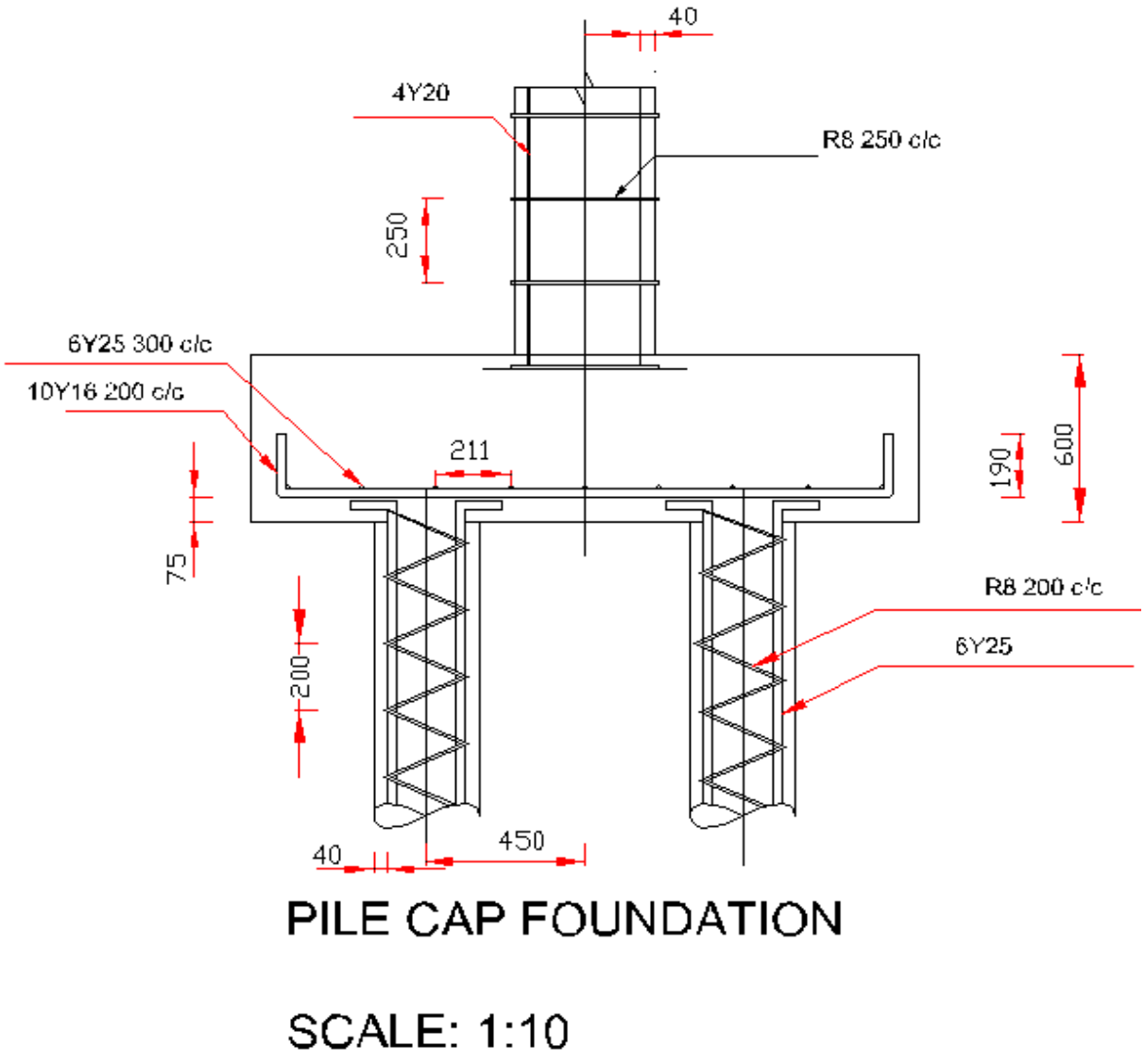

FIGURE 1 **[30]**

Copyright reserved

QUESTION 2: RECTANGULAR GRID

Redraw the following rectangular grid using the CAD program.
Use your discretion for dimensions not given.

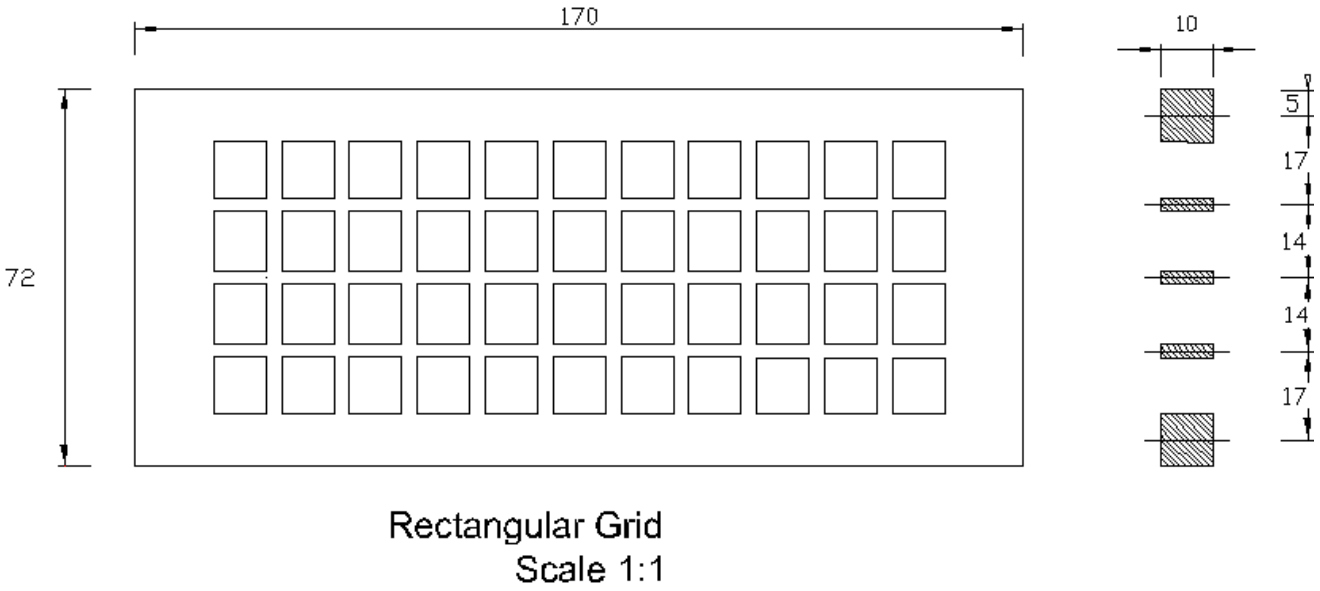

Rectangular Grid
Scale 1:1

FIGURE 2 **[20]**

Copyright reserved

QUESTION 3: TRUSSES

FIGURE 3, shows a line diagram of a typical bolted latticed girder.

Draw, to scale 1:5, typical bolted details at A and B.

Specifications:

- Top and bottom boom: 90 × 90 × 10 hot rolled steel angle profiles.
- All internal members: 70 × 70 × 10 hot rolled steel angle profiles.
- Gusset plates: 10 mm thick.
- Use your discretion for bolt hole centres and edge distances.
- All bolt holes are drilled on the centre lines of the angles and all bolts are M16.

Insert suitable dimensions.

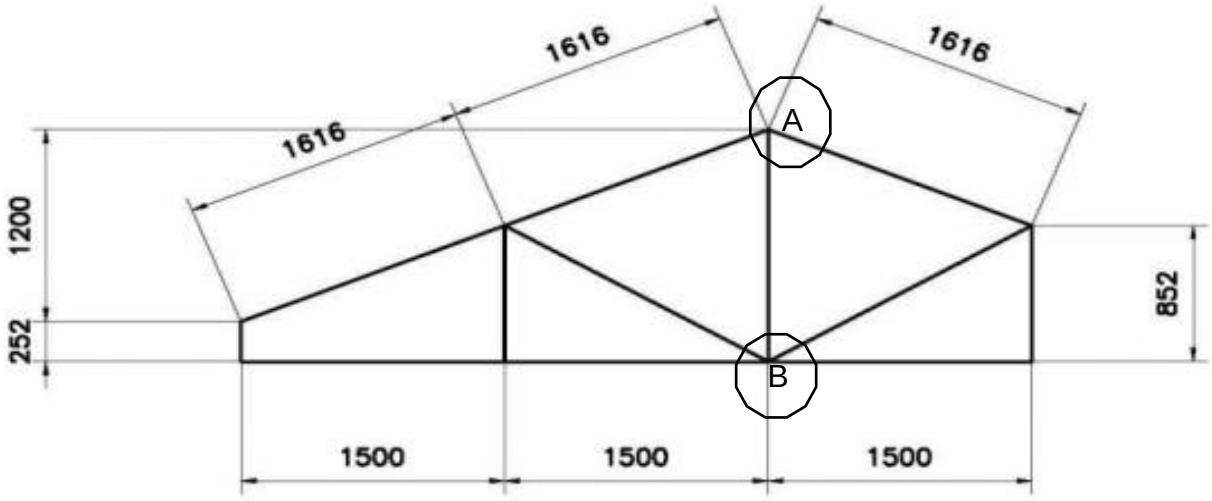

FIGURE 3 **[25]**

TOTAL: 75

Copyright reserved