higher education & training

Department:
Higher Education and Training
REPUBLIC OF SOUTH AFRICA

NATIONAL CERTIFICATE

MECHANOTECHNOLOGY N3

(8190373)

26 November 2024 (X-paper)
09:00–12:00

Nonprogrammable calculators may be used.

This question paper consists of 7 pages, 2 tables and 1 formula sheet.

124Q1E2426

Copyright reserved

DEPARTMENT OF HIGHER EDUCATION AND TRAINING
REPUBLIC OF SOUTH AFRICA

NATIONAL CERTIFICATE
MECHANOTECHNOLOGY N3
TIME: 3 HOURS
MARKS: 100

INSTRUCTIONS AND INFORMATION

1. Answer all the questions.
2. Read all the questions carefully.
3. Number the answers according to the numbering system used in this question paper.
4. Start each section on a new page.
5. Use only a black or blue pen.
6. Write neatly and legibly.

Copyright reserved

QUESTION 1: POWER TRANSMISSION

1.1 A wedge belt drive of a 55 kW electric motor runs at 1300 r/min to a conveyor belt running at 750 r/min. The drive is 'light duty' and the start is 'soft'. The approximate centre distance is 2000 mm over a duty of 11 hours per day. The shaft driving the motor has an 80 mm diameter and the shaft driving the conveyor is 90 mm.

Refer to TABLE 1 and TABLE 2 (attached) and answer the following questions:

1.1.1 Calculate the speed ratio (2)

1.1.2 Determine the service factor (1)

1.1.3 Calculate the design power (2)

1.2 List THREE construction features of a wedge belt. (3)

1.3 Alignment is an important aspect of belt drive installation. Give THREE effects that misalignment can have on belt drives. (3)

1.4 FIGURE 1 below shows the different types of gears commonly applied in industry. Name the parts labelled A–G by writing only the answer next to the letter (A–G) in the ANSWER BOOK.

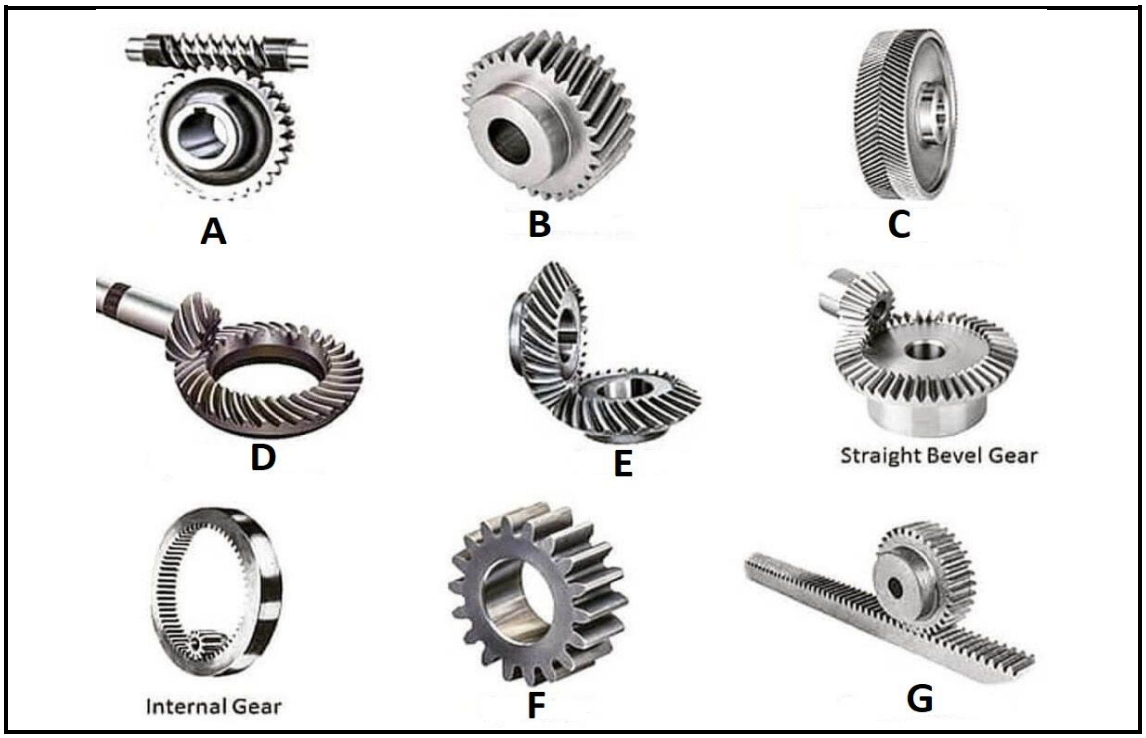

FIGURE 1

(7)

1.5 List TWO disadvantages of a cone clutch. (2)

[20]

QUESTION 2: BRAKES

State FIVE disadvantages of a mechanical braking system. **[5]**

QUESTION 3: BEARINGS

3.1 FIGURE 2 below shows one of the anti-friction bearings commonly applied in industry.

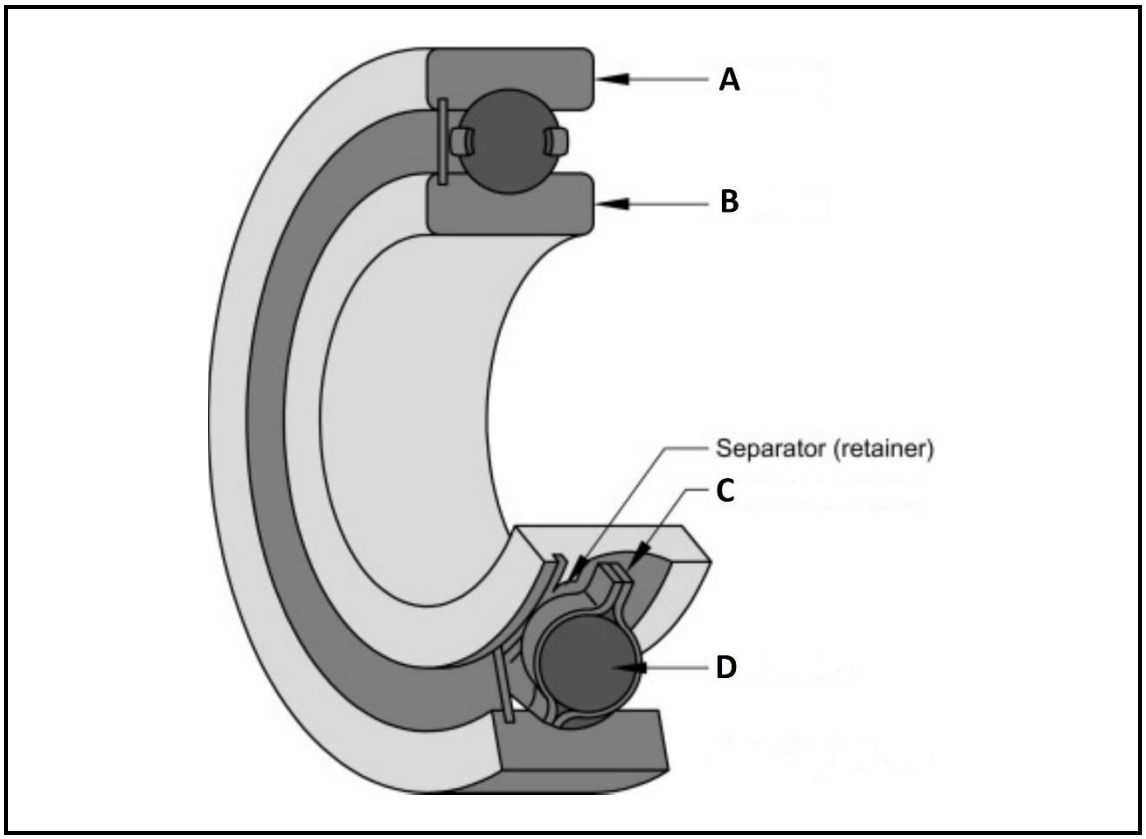

FIGURE 2

Name the parts labelled A to D by writing only the answer next to the letter (A–D) in the ANSWER BOOK. (4)

3.2 Name THREE main types of applicable bearing loads on anti-friction bearings. (3)

3.3 Each bearing has an identification number consisting of THREE figures.

State the meaning of these figures from the first figure to the third figure. (3)
[10]

QUESTION 4: WATER PUMPS, COOLING AND LUBRICATION

4.1 Describe the difference in the working principle between a *centrifugal water pump* and a *reciprocating water pump*. (4)

4.2 FIGURE 3 below shows a typical water pump commonly used in industry. Study the figure and answer the questions that follow.

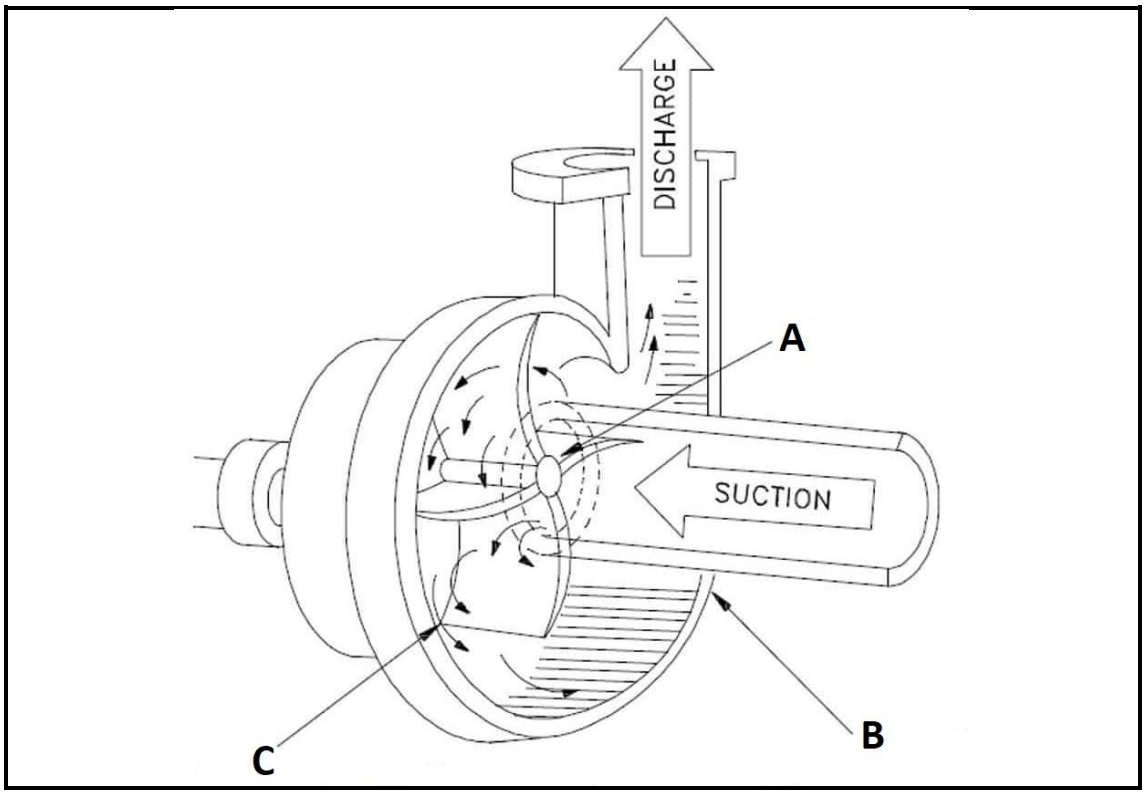

FIGURE 3

4.2.1 Name the type of pump shown in FIGURE 3 above. (1)

4.2.2 Name the parts labelled A–C as indicated in the figure above. Write only the answer next to the letter (A–C) in the ANSWER BOOK. (3)

4.3 Name any TWO parts of a centrifugal water pump. (2)

4.4 Discuss the reasons for cooling compressors. (3)

4.5 Give TWO reasons for filtering oil. (2)
[15]

QUESTION 5: HYDRAULICS AND PNEUMATICS

5.1 The pressure inside a hydraulic cylinder with an internal cross-sectional area of 0,00159 m^2 is 400 kPa.

Calculate:

5.1.1 The inside diameter of a cylinder in millimetres (mm). Round off your answer to THREE decimal places.

5.1.2 The force of the plunger in Newton (N).

(2 × 2) (4)

5.2 Name ONE function of a hydraulic pump. (1)

5.3 Name TWO main sections of a basic pneumatic system. (2)

5.4 State TWO functions of an air receiver in a pneumatic system. (2)

5.5 Make a neat ISO symbol drawing of a pressure gauge as it applies to pneumatics systems. (1)
[10]

QUESTION 6: INTERNAL COMBUSTION ENGINE

6.1 State TWO commonly known methods of fuel supply for a petrol engine. (2)

6.2 State THREE disadvantages of a diesel engine compared to a petrol engine. (3)
[5]

QUESTION 7: CRANES AND LIFTING MACHINES

7.1 Explain what is meant by the term *drop* in a steel rope. (1)

7.2 State THREE advantages of a load limiter. (3)

7.3 One of the factors that causes steel ropes to deteriorate is plastic flow.

What is meant by the term *plastic flow*? (1)

7.4 State THREE factors to bear in mind when choosing a steel rope. (3)
[8]

Copyright reserved

QUESTION 8: MATERIAL AND MATERIAL PROCESSES

8.1 State the difference between *thermoplastics* and *thermosetting plastics*. (2)

8.2 Briefly describe the following properties of metals:

8.2.1 Hardness

8.2.2 Tensile strength (2 × 1) (2)

8.3 State TWO purposes of tempering. (2)

8.4 Briefly describe ONE general behaviour of copper during hammering. (1)
[7]

QUESTION 9: INDUSTRIAL ORGANISATION AND PLANNING

9.1 State FOUR obstacles to effective communication that should be considered during the process of communication. (4)

9.2 Give ONE function of the Labour Relations Act (No. 66 of 1995). (1)

9.3 State TWO functions of an administrative system. (2)

9.4 State TWO advantages of verbal communication. (2)

9.5 Briefly discuss the purpose of budgeting. (3)
[12]

QUESTION 10: ENTREPRENEURSHIP

10.1 Explain the term *entrepreneur*. (3)

10.2 Name THREE business resources required by an entrepreneur to do well in business. (3)

10.3 Indicate whether the following statements are TRUE or FALSE by writing only 'True' or 'False' next to the question number (10.3.1–10.3.2) in the ANSWER BOOK.

10.3.1 Entrepreneurs are invaluable to South Africa.

10.3.2 Profit is not important to an entrepreneur.

(2 × 1) (2)
[8]

TOTAL: 100

Copyright reserved

TABLE 1

SERVICE FACTORS FOR THE SELECTION OF WEDGE BELTS

	TYPES OF PRIME MOVERS					
	'Soft' starts			'Heavy' starts		
TYPES OF DRIVEN MACHINES	Hours per day duty			Hours per day duty		
	10 and under	**Over 10 to 16**	Over 16	**10 and under**	**Over 10 to 16**	Over 16
Class 1 – Light duty Blowers and fans Centrifugal compressors and pumps Belt conveyors (uniformly loaded)	1,0	1,1	1,2	1,1	1,2	1,3
Class 2 – Medium duty Blowers and fans Rotary compressors and pumps Belt conveyors (not uniformly loaded) Generators	1,1	1,2	1,3	1,2	1,3	1,4
Class 3 – Heavy duty Brick machinery Compressors and pumps (reciprocating) Conveyors (heavy duty) Hammer mills Punches and presses	1,2	1,3	1,4	1,4	1,5	1,6
Class 4 – Extra heavy duty Crushers Mills	1,3	1,4	1,5	1,5	1,6	1,8

Copyright reserved

TABLE 2

MINIMUM PULLEY DIAMETER (mm)

Speeds of faster than in r/min	Minimum pulley diameter (mm)																		
	Design Power (kW)																		
	To 1	3,0	4,0	5,0	7,5	10	15	20	25	30	40	50	60	75	90	110	130	150	200	250
500	67	90	100	112	125	140	180	200	212	236	250	280	280	315	375	400	450	475	500	560
600	67	85	90	100	112	125	140	180	200	212	224	250	265	280	300	335	375	400	475	500
720	67	80	85	90	90	106	132	150	160	170	200	236	250	265	280	300	335	375	450	500
960	67	75	80	85	95	100	112	132	150	180	180	200	224	250	280	280	300	335	400	450
1 200	67	71	80	80	95	95	106	118	132	150	160	180	200	236	236	250	265	300	335	355
1 440	67	67	75	80	85	85	100	112	125	140	160	170	190	212	236	236	250	280	315	335
1 800	67	67	71	75	80	85	95	106	112	125	150	160	170	190	212	224	236	265	300	335
2 800	67	67	67	67	80	80	85	90	100	112	125	140	160	170	180	212	224	236	-	-

Copyright reserved

MECHANOTECHNOLOGY N3

FORMULA SHEET

Any applicable formula may also be used.

1. *Corrected power per belt = (basic power per belt + power increment per belt) × correction factor*

2. *Force (F) = Pressure (P) × Area (A)*

3. *Work done (W) = Force (F) × Distance (s)*

4. *Volume (V) = Area of base (A) × Perpendicular height* $(\perp h)$

Copyright reserved