higher education & training

Department:
Higher Education and Training
REPUBLIC OF SOUTH AFRICA

NATIONAL CERTIFICATE

ELECTRICAL TRADE THEORY N3

(11041263)

26 November 2024 (X-paper)
09:00–12:00

Drawing instruments and nonprogrammable calculators may be used.

This question paper consists of 7 pages and 1 formula sheet

114Q1E2426

Copyright reserved

DEPARTMENT OF HIGHER EDUCATION AND TRAINING
REPUBLIC OF SOUTH AFRICA

NATIONAL CERTIFICATE
ELECTRICAL TRADE THEORY N3
TIME: 3 HOURS
MARKS: 100

INSTRUCTIONS AND INFORMATION

1. Answer all the questions.
2. Read all the questions carefully.
3. Number the answers according to the numbering system used in this question paper.
4. Start each section on a new page.
5. Use only a black or blue pen.
6. Sketches must be neat, labelled and large enough to show the required detail.
7. Where applicable, answers must be in accordance with the SABS (SANS) Code of Practice SANS 10142 – 1:2003 for Wiring of Premises or later version.
8. NB: 1 Mark will be subtracted from answers without SI units.
9. Write neatly and legibly.

Copyright reserved

QUESTION 1: ALTERNATING CURRENT CIRCUIT THEORY

1.1 Complete the following sentence or sentences or paragraphs by writing only the missing word or words next to the question number (1.1.1–1.1.3) in the ANSWER BOOK.

1.1.1 In a purely resistive AC circuit, the current flowing through the resistor and the applied voltage are in … (1)

1.1.2 In a purely inductive AC circuit, the current flowing through the inductor is … the applied voltage by an angle of … (2)

1.1.3 In a capacitive AC circuit, the current flowing through the capacitor is … the applied voltage by an angle of … (2)

1.2 Three identical coils are connected in delta and are supplied by a 380 V, 50 Hz voltage source. Each coil has a resistance of 6,75 Ω and an inductance of 0,043 H.

Calculate the following:

1.2.1 The voltage across each coil (1)

1.2.2 The current drawn by each coil (6)

1.2.3 The power factor at which the circuit is operating (2)

1.2.4 The total power drawn by the load in kW (2)

1.3 Explain the difference between *algebraic sum* and *vector sum* of quantities. (2)
[18]

QUESTION 2: DOMESTIC APPLIANCES

2.1 A washing machine is an appliance used for washing clothing and linen.

Name any FOUR types of washing machines. (4)

2.2 State THREE disadvantages of induction cookers. (3)

2.3 Briefly explain the principle of operation of a simmerstat switch. (5)
[12]

Copyright reserved

QUESTION 3: LIGHTING SYSTEMS

3.1 Name THREE main types of lighting. (3)

3.2 Indicate whether the following statements are TRUE or FALSE by writing only 'True' or 'False' next to the question number (3.2.1–3.2.5) in the ANSWER BOOK.

3.2.1 Gases in discharge lamps have a positive temperature coefficient or resistance and there is a need to limit the current as temperature increases.

3.2.2 A bit of nitrogen and argon are mixed with the halogen gas to maintain a higher gas pressure.

3.2.3 Phosphor powder is used in incandescent lamps.

3.2.4 Chandeliers are normally used for ambient lighting.

3.2.5 The aim of accent lighting is to replace sunlight.

(5 × 1) (5)
[8]

QUESTION 4: PROGRAMMABLE LOGIC CONTROLLERS

4.1 Explain what a PLC is. (2)

4.2 State any THREE components of a PLC. (3)
[5]

QUESTION 5: DIRECT-CURRENT MACHINES

5.1 A compound-wound generator has two field coils, namely a series field and a shunt field.

State the reason for this. (2)

5.2 A 440 V, 40 kW shunt connected generator has a shunt field resistance of 100 Ω and an armature resistance of 0,12 Ω.

If it is known that the no-load armature current is 15 A, calculate:

5.2.1 The shunt field current (2)

5.2.2 The shunt field copper loss (2)

5.2.3 The armature current (2)

Copyright reserved

5.2.4 Total losses (4)

5.2.5 The full-load efficiency of the generator (3)
[15]

QUESTION 6: ALTERNATING-CURRENT MACHINES

6.1 Refer to the control circuit in the FIGURE below and explain the principle of operation of an automatic star-delta starter.

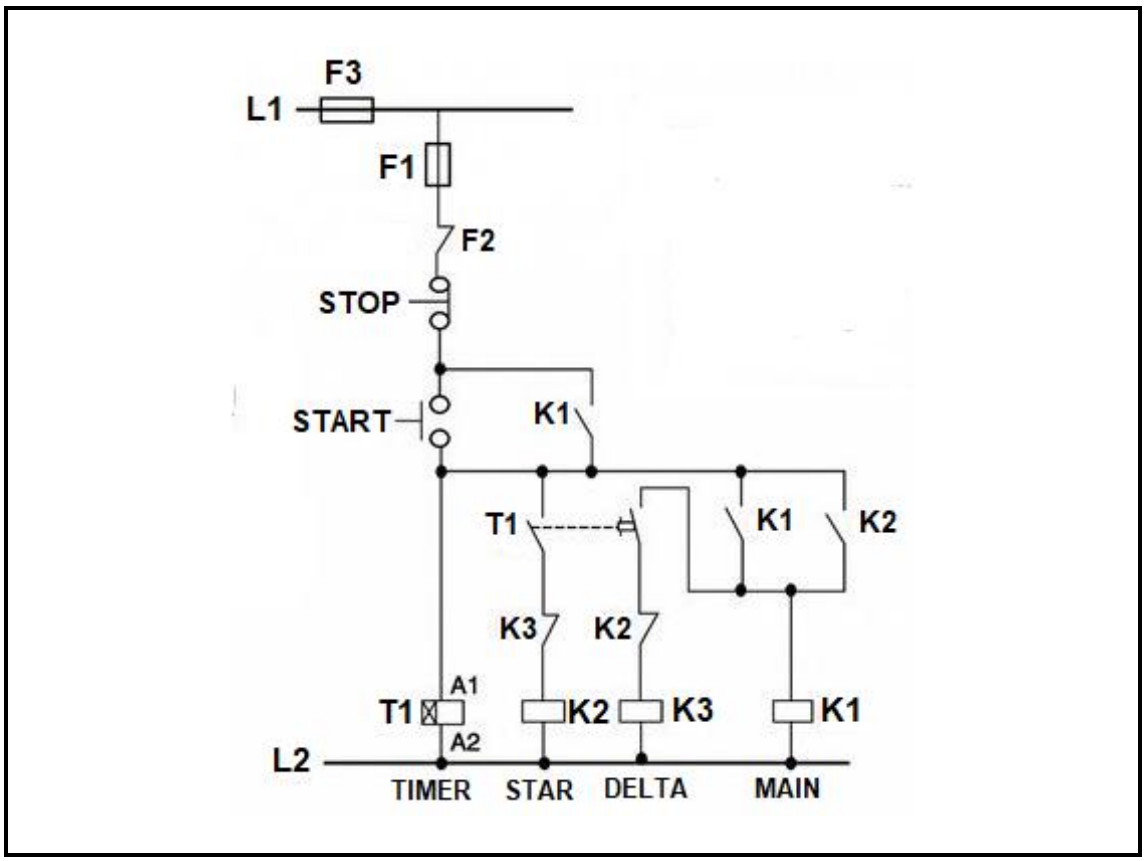

(6)

6.2 Calculate the slip of a motor that runs at a synchronous speed of 1 300 r/min while the rotor is only turning at a speed of 1 225 r/min. (2)

6.3 A three-phase 50 Hz motor has FOUR poles.

Calculate the synchronous speed in r/min. (2)
[10]

QUESTION 7: TRANSFORMERS

7.1 Choose an item from COLUMN B that matches each description in COLUMN A. Write only the letter (A–D) next to the question number (7.1.1–7.1.4) in the ANSWER BOOK.

COLUMN A		COLUMN B	
7.1.1	Losses occur in the primary and secondary windings in the form of heat.	A	Iron losses
7.1.2	Losses occur in the insulating materials of a transformer.	B	Copper losses
7.1.3	Losses occur in the form of heat when some of the magnetic flux produced by the primary winding of a transformer.	C	Dielectric losses
7.1.4	Losses occur in the magnetic core of the transformer.	D	Stray losses

(4 × 1) (4)

7.2 State FOUR methods of cooling transformers. (4)

7.3 Why is silica gel placed in the breather? (1)

7.4 Briefly, explain the function of the conservator tank. (1)

[10]

QUESTION 8: EARTHING SYSTEMS

8.1 Draw a fully labelled three-phase circuit diagram showing a TT earthing network. (7)

8.2 Complete the following sentence(s) by filling the missing word(s)

System earthing relates to the (8.2.1) … of the power system, such as earthing the (8.2.2) … of transformers e.g. earthing the star point of a (8.2.3) …

(3 × 1) (3)

[10]

Copyright reserved

QUESTION 9: POWER MANAGEMENT

9.1 Briefly explain what a *phase advancer* is. (2)

9.2 Various options are given as possible answers to the following questions. Choose the answer and write only the letter (A–D) next to the question number (9.2.1–9.2.3) in the ANSWER BOOK.

9.2.1 A radio-controlled relay can be controlled via …

A a dedicated rf-link between the controlling switch and the relay.
B a smart-phone app (if enabled for such purpose).
C a computer attached to a Wi-Fi network (if enable for such purpose).
D All of the above.

9.2.2 A ripple relay is used to …

A control the switching of a hot water geyser by way of control signals sent through the supply line.
B control the switching of a hot water geyser by way of digital time switch.
C control the switching of a hot water geyser by way of the GSM network.
D reduce the AC ripple on the output of a DC power supply.

9.2.3 The maximum demand of a consumer is determined by …

A the maximum rating of the main breaker.
B the rating of the tariff breaker.
C the peak demand on the supply.
D the maximum average demand (kVA or kW) as sampled over a 30-minute period within the monthly billing cycle.

(3 × 1) (3)

9.3 Explain what *Tariff MCBs* are as applicable to energy usage. (2)
[7]

QUESTION 10: RENEWABLE ENEGRY

10.1 Briefly explain the purpose of a UPS. (2)

10.2 Name THREE disadvantages of solar energy. (3)
[5]

TOTAL: 100

Copyright reserved

(11041263)

ELECTRICAL TRADE THEORY N3

FORMULA SHEET

$I_T = \frac{V}{Z}$

$I_{ACTIVE} = I_T \cos \emptyset$

$I_{REACTIVE} = I_T \sin \emptyset$

$X_L = 2\pi fL$

$X_c = \frac{1}{2\pi fC}$

$Z = \sqrt{R^2 + (X_L - X_C)^2}$

$\cos \theta = \frac{R}{Z}$

$V_R = I_T R$

$V_{XL} = I_T X_L$

$V_{XC} = I_T X_C$

$V = \sqrt{V_R{}^2 + (V_{XL} - V_{XC})^2}$

$P = I^2 R$

$P = \sqrt{3}\, V_L I_L \cos \theta$

$E = V + I_a R_a$

$$Efficiency = \frac{VI}{VI + I_a{}^2 R_a + I_s V + C} \times 100\%$$

$$Efficiency = \frac{VI - (I_a{}^2 R_a + I_s V + C)}{VI} \times 100\%$$

$$Efficiency = \frac{2\pi N(W - S)r}{60VI} \times 100\%$$

$S = VI$

$S = \sqrt{3}\, V_L I_L$

DELTA

$V_L = V_{PH/F}$

$I_L = \sqrt{3}\, I_{PH}$

STAR

$V_L = \sqrt{3}\, V_{PH}$

$I_L = I_{PH}$

$\frac{V_P}{V_S} = \frac{N_P}{N_S} = \frac{I_S}{I_P}$

$N = \frac{f.60}{P}$

$s = \frac{n - n_r}{n}$

$w = 2\pi f$

$P = VI \cos \theta$

$$E = 2p\Phi \frac{ZN}{60c}$$

$i = I_m \sin$

$I_{ms} = 0{,}707\, I_m$

$I_{ave} = 0{,}632\, I_m$

$I_{rms} = \sqrt{\frac{i1^2 + i2^2 + \cdots in^2}{n}}$

$I_{ave} = \frac{i_1 + i_2 + .. i_n}{n}$

$Form\ factor = \frac{RMS-value}{AVE-value}$

$Crest\ factor = \frac{MAX-value}{RMS-value}$

SERIES

$R_T = R_1 + R_2 + \cdots R_n$

PARALLEL

$\frac{1}{R_T} = \frac{1}{R_1} + \frac{1}{R_2} + \cdots \frac{1}{R_n}$

$E = V - I_a R_a$

$$N = \frac{V}{K\Phi}$$

$$T = \frac{0{,}318 I_a Zp\Phi}{C}$$

$Efficiency = \frac{output\ power}{input\ power}$

Copyright reserved