higher education & training

Department:
Higher Education and Training
REPUBLIC OF SOUTH AFRICA

# NATIONAL CERTIFICATE (VOCATIONAL)

# PROCESS CHEMISTRY
## NQF LEVEL 4

(6050444)

**12 November 2024 (X-paper)**
**09:00–12:00**

**This question paper consists of 6 pages.**

099Q1N2412

Copyright reserved

# DEPARTMENT OF HIGHER EDUCATION AND TRAINING
# REPUBLIC OF SOUTH AFRICA

NATIONAL CERTIFICATE (VOCATIONAL)
PROCESS CHEMISTRY
NQF LEVEL 4
TIME: 3 HOURS
MARKS: 100

---

**INSTRUCTIONS AND INFORMATION**

1. Answer all the questions.
2. Read all the questions carefully.
3. Number the answers according to the numbering system used in this question paper.
4. Use only a black or blue pen.
5. Write neatly and legibly.

---

Copyright reserved 

## QUESTION 1

Indicate whether the following statements are TRUE or FALSE by writing only 'True' or 'False' next to the question number (1.1–1.5) in the ANSWER BOOK.

1.1 PET is used in the production of cool drink bottles.

1.2 Lonmin operates a mining complex at Marikana in Limpopo province.

1.3 Coal is a non-renewable resource that is used to produce petrol and diesel.

1.4 Diesel is a fuel that is used to generate electrical energy in South Africa.

1.5 Penicillin is used to treat diseases that are caused by viruses and germs.

(5 × 1) **[5]**

## QUESTION 2

2.1 The following diagram represent the percentages of plastic recycling based on how it is used: PVC (20%), PP(15,15%), HDPE (35%), LDPE (5%) and PET (25%).

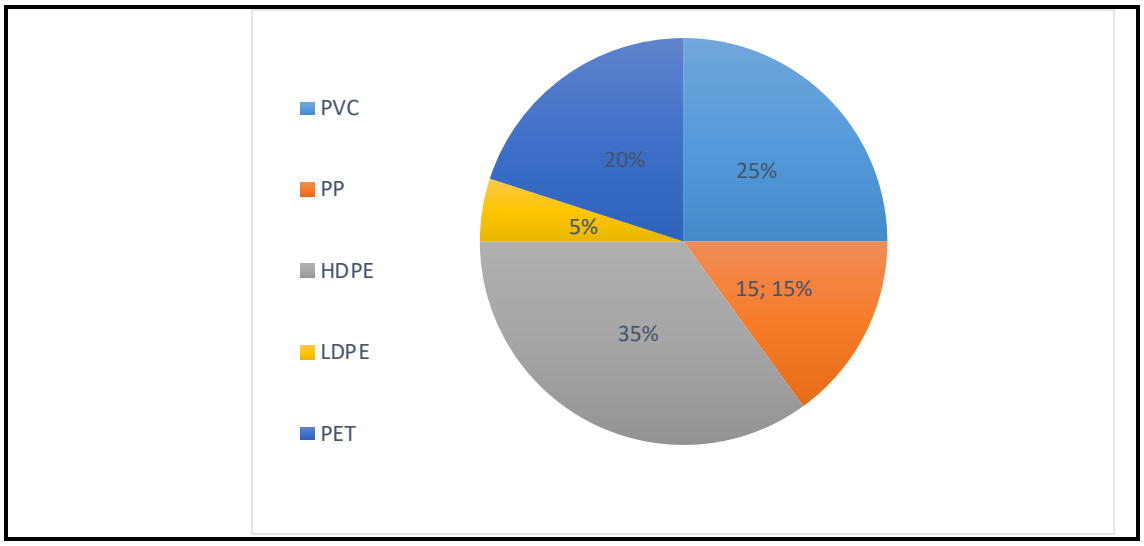


Answer the following questions based on the diagram above:

2.1.1 State TWO properties of PP.

2.1.2 State TWO uses of LDPE.

(2 × 2) (4)

2.2 Explain why HDPE has a high percentage usage and recycling. (1)

2.3 PVC is widely used in the construction industry. State TWO properties of PVC that make it very useful in the construction industry. (2)

2.4 Based on the diagram given in QUESTION 2.1 above, give a brief description of plastic recycling. (2)

2.5 Arrange the polymers in the diagram above in order of increasing usage and recycling. (5)
**[14]**

## QUESTION 3

3.1 Draw a fully labelled process diagram for the solution polymerisation of SBR. (10)

3.2 Complete and balance the following reaction equations:

3.2.1 $NaC\ell(s) + H_2O(\ell) \rightarrow$ (3)

3.2.2 $C\ell_2(g) + CH_2 = CH_2 \rightarrow$ (2)
**[15]**

## QUESTION 4

4.1 Complete the following diagram by only writing each letter (A–N) and its meaning in the ANSWER BOOK.

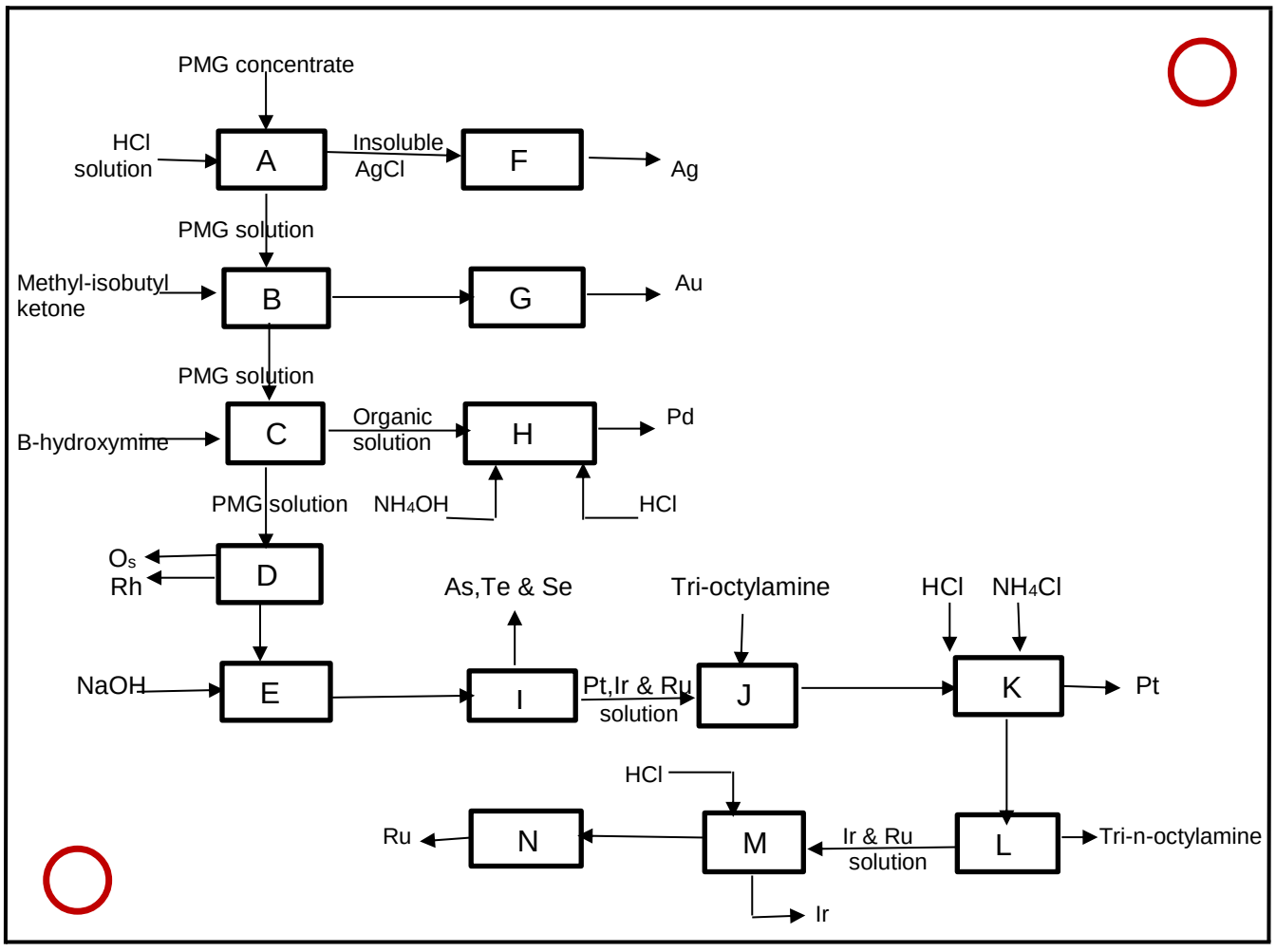


(14)

4.2 Name the following precious metals and state TWO industrial applications of each:

4.2.1 Au

4.2.2 Ag

(2 × 2) (4)

4.3 Write brief notes about the platinum and iridium solvent extraction. (3)

4.4 Name THREE types of ferrochrome alloys. (3)
**[24]**

**QUESTION 5**

5.1 Write the chemical formulas of the following compounds:

5.1.1 Ammonium nitrate

5.1.2 Naphthalene

5.1.3 Toluene

(3 × 1) (3)

5.2 South Africa is a developing country with an unusual large chemical industry. Sasol is the major converter of coal to petrochemicals in South Africa.

5.2.1 What does the abbreviation Sasol stand for? (1)

5.2.2 Name FOUR steps in sequence that Sasol uses in the coal-to-liquid (CTL) process. (4)

5.2.3 Name THREE valuable chemicals that are produced by Sasol. (3)

5.2.4 During the gasification process, coal, oxygen and water are combined at a high temperature to form raw gas.

Write a balanced chemical equation for the reaction. (4)
**[15]**

Copyright reserved 

## QUESTION 6

6.1 The Fischer-Tropsch process produces hydrocarbons in the presence of a catalyst and Sasol uses HTFT and LTFT processes to achieve this.

6.1.1 Name ONE product that is produced by the LTFT process. (1)

6.1.2 Name TWO products that are produced by the HTFT process. (2)

6.2 Discuss the THREE steps of the process on which the Rectisol unit is based. (3 × 2) (6)

6.3 Name the products that are used for the following:

6.3.1 As fuel for light road vehicles

6.3.2 As fuel for generators and buses

6.3.3 As aviation (jet) fuel

6.3.4 In road construction

(4 × 1) (4)
**[13]**

## QUESTION 7

7.1 What are *herbicides*? (1)

7.2 Both oxygen and time play pivotal roles in the fermentation process, briefly explain these roles respectively. (2 × 2) (4)

7.3 Name TWO products that are produced by NCP Alcohols. (2)

7.4 Write a brief description of the mashing process during the production of beer. (4)

7.5 Why is it important to cool beer before adding yeast? (1)

7.6 Give TWO reasons why hops is important in beer brewing. (2)
**[14]**

**TOTAL: 100**

Copyright reserved