higher education & training

Department:
Higher Education and Training
REPUBLIC OF SOUTH AFRICA

NATIONAL CERTIFICATE

ENGINEERING SCIENCE N1

(15070391)

22 November 2024 (X-paper)
09:00–12:00

Drawing instruments and nonprogrammable calculators may be used.

This question paper consists of 13 pages and 1 formula sheet.

088Q1E2422

Copyright reserved

DEPARTMENT OF HIGHER EDUCATION AND TRAINING
REPUBLIC OF SOUTH AFRICA

NATIONAL CERTIFICATE
ENGINEERING SCIENCE N1
TIME: 3 HOURS
MARKS: 100

INSTRUCTIONS AND INFORMATION

1. Answer all the questions.
2. Read all the questions carefully.
3. Number the answers according to the numbering system used in this question paper.
4. Start each section on a new page.
5. Answers to calculations must be given correctly to THREE decimal places.
6. All calculations must show the following three steps:
   - 6.1 The formula
   - 6.2 The replacement of values
   - 6.3 The answer and correct SI-unit
7. Gravitational acceleration (g) should be taken as 9,8 $m.s^{-2}$.
8. Only use a black or a blue pen.
9. Sketches must be neatly done in pencil.
10. Write neatly and legibly.

Copyright reserved

SECTION A

QUESTION 1

Various options are given as possible answers to the following questions. Choose the answer and write only the letter (A–D) next to the question number (1.1–1.5) in the ANSWER BOOK.

1.1 Which ONE of the following is not a vector quantity?

A Velocity
B Force
C Energy
D Momentum

1.2 A pupil follows the route shown in FIGURE 1 below and arrives back at the starting point.

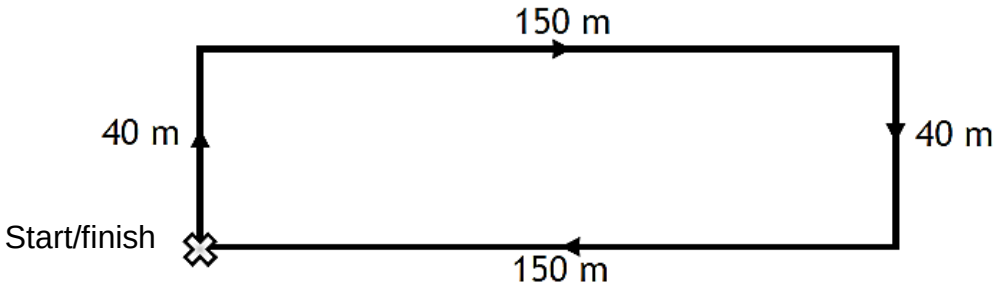

FIGURE 1

Identify the row in the table that shows the total distance walked and the magnitude of the final displacement.

	Total distance (m)	Total displacement (m)
A	0	80
B	190	0
C	380	0
D	0	380

1.3 FIGURE 2 below shows a side view of a roller coaster track.

At which point does the roller coaster have the greatest amount of potential energy?

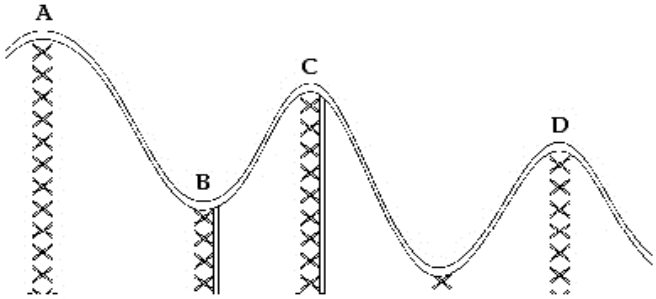

FIGURE 2

A A
B B
C C
D D

1.4 What is temperature?

A How hot or cold something is
B A number on a thermometer
C What I have when I am sick
D Anything around 30 °

1.5 What is power?

A Work per unit time
B Force per unit distance
C Total energy used
D Force over a time interval

(5 × 1) **[5]**

QUESTION 2

Indicate whether the following statements are TRUE or FALSE by writing only 'True' or 'False' next to the question number (2.1–2.5) in the ANSWER BOOK.

2.1 Weight and mass are the same quantity.

2.2 Specific heat capacity is the amount of heat required to change the temperature of a unit mass of a substance by 1 °C.

2.3 Assuming no air friction, an object in freefall would have constant acceleration.

2.4 Parallel circuits have only one path in which electricity can follow.

2.5 The ampere is the unit of resistance.

(5 × 1) **[5]**

Copyright reserved

QUESTION 3

Choose a term from COLUMN B that matches a description in COLUMN A. Write only the letter (A–G) next to the question number (3.1–3.5) in the ANSWER BOOK.

COLUMN A		COLUMN B	
3.1	The rate at which work is done	A	atom
3.2	A quantity that has both magnitude and direction	B	scalar
3.3	Material that electricity can travel through easily	C	power
3.4	The smallest unit of matter	D	proton
3.5	Atomic particles that are positively charged	E	conductor
		F	vector
		G	work

(5 × 1) **[5]**

QUESTION 4

Complete the following sentences by choosing a word from the list below. Write only the word next to the question number (4.1–4.5) in the ANSWER BOOK.

density; work; speed; electrons; matter; rest; neutrons; direction; solid; material

4.1 Energy is the ability to do … or cause change.

4.2 Gravitational acceleration is a vector measurement because it has both magnitude and …

4.3 Mass is the measure of how much … an object contains.

4.4 … are atomic particles that have no charge.

4.5 … can be defined as anything that takes up space and has mass.

(5 × 1) **[5]**

TOTAL SECTION A: 20

SECTION B

QUESTION 5

5.1 Peter's car ran out of petrol. He and William push the car to the nearest petrol station. Peter pushes with a force of 45 N and William pushes with a force of 52 N. Both push the car in an easterly direction.

Graphically determine the resultant force of them pushing the car. (2)

5.2 Aubrey and Thato are two players in a soccer game. Aubrey kicks a corner to Thato who scores a goal. The movement of the ball is shown in FIGURE 3.

Graphically determine the resultant movement of the ball.

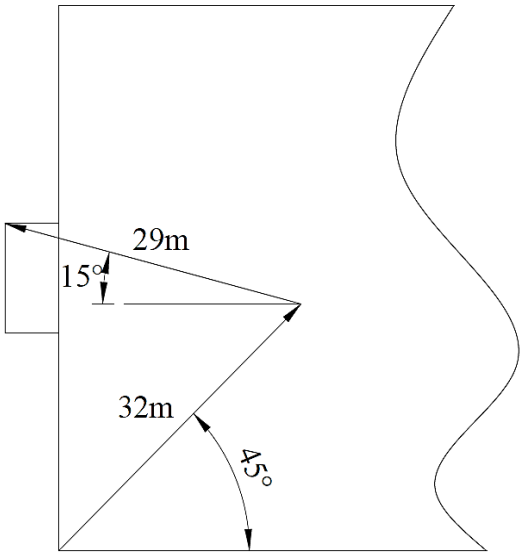

FIGURE 3 (2)

5.3 Victor and Thuso are on a road trip. On a long stretch of road, they travel at a constant speed of 220 km/h.

5.3.1 Draw a distance/time graph of the motion.

HINT: Draw the graph for 3 hours. (2)

5.3.2 From the graph, determine how far they will travel in 1½ hours. (1)

5.4 Neil Armstrong was the first man on the moon. His mass on earth was 85 kg.

5.4.1 What will his weight be on the moon?

HINT: The gravitational acceleration on the moon is 1,6 $m.s^{-2}$

5.4.2 Calculate his weight on earth.

(2 × 1) (2)

[9]

QUESTION 6

6.1 The diagram in FIGURE 4 represents two pulling forces acting on a body.

By using the parallelogram-of-forces method, determine the resultant of the pulling forces.

HINT: Use a scale 10 N = 1 cm

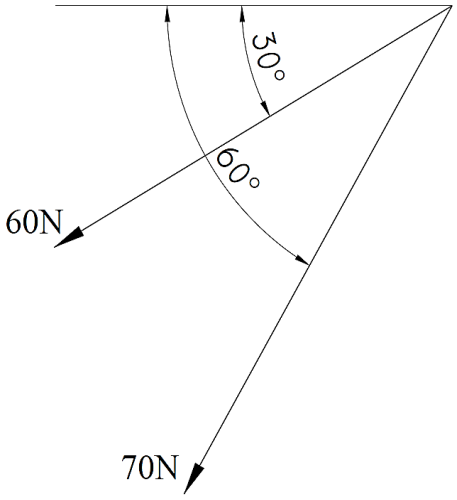

FIGURE 4 (3)

6.2 The diagram in FIGURE 5 shows a shop's advertising board supported by two ropes. The board has a weight of 1 500 N.

Graphically determine the value of the two unknown forces in the ropes.

HINT: Use the triangle-of-forces method

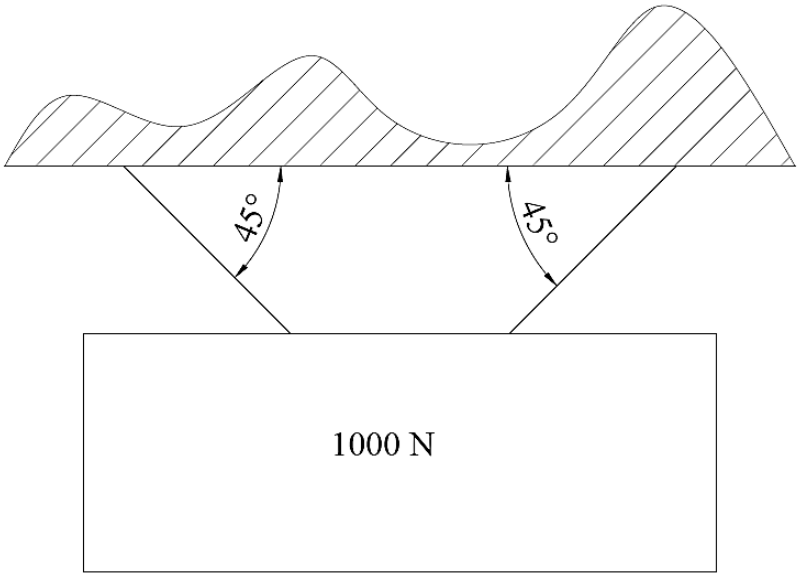

FIGURE 5 (3)

6.3 A single rope pulley system used to lift bales of wool has three pulleys in the upper block and two pulleys in the lower block. An effort of 650 N is needed to lift a bale of wool with a mass of 300 kg.

Answer the questions below regarding the pulley system:

6.3.1 Calculate the velocity ratio of the pulley system. (1)

6.3.2 Calculate the mechanical advantage of the pulley system. (2)

6.4 FIGURE 6 shows a simple lever system. The system is in equilibrium. Use the law of moments to calculate the value of the unknown force.

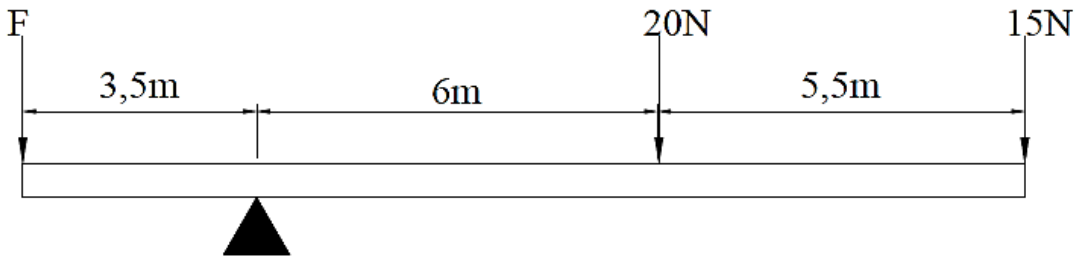

FIGURE 6 (3)

6.5 When a force is applied to a body it can have different effects on the body.

Name TWO effects that a force can have on a body. (2)
[14]

QUESTION 7

7.1 The law of the conservation of energy states that energy cannot be created or destroyed but can only be transferred from one form to another.

Identify the types of energy transfers in the diagrams below.

HINT: Write the answers as follows: e.g., Kinetic energy to potential energy.

7.1.1

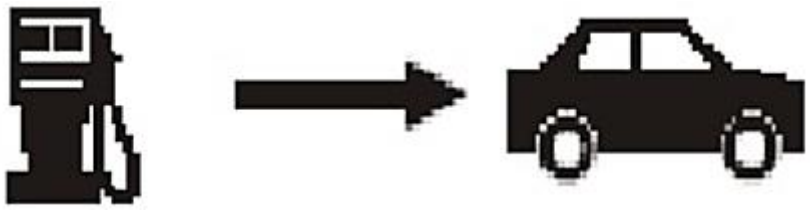

7.1.2



7.1.3



7.1.4



(4 × 1) (4)

7.2 A load of bricks with a mass of 1 000 kg is hoisted vertically to the top of a building. The building is 15 m high.

7.2.1 Draw a neat labelled force/distance graph of the movement and use a scale of 1 000 N = 1 cm and 1 m = 1 cm. (3)

7.2.2 From the graph, determine the work done. (1)

7.3 A motorcycle is moving at a constant speed of 75 km/h on a level road. The power required to keep that constant speed is 1,1 kW.

7.3.1 Calculate the force needed to keep the motorcycle at a constant speed. (3)

7.3.2 Calculate the work done in a time of SIX minutes. (2)

[13]

QUESTION 8

8.1 Refer to FIGURE 7 and answer the questions that follow.

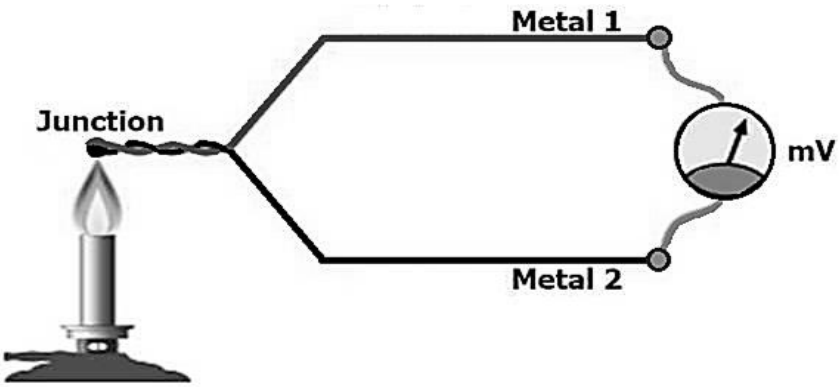

FIGURE 7

8.1.1 What is the name of the device in FIGURE 7? (1)

8.1.2 Name TWO uses of the device in FIGURE 7. (2)

8.2 When heat is applied to an object, certain effects can be observed.

Name the effects of heat in the following cases:

8.2.1 A block of ice is heated to 100 °C.

8.2.2 A steel rod is heated to 460 °C.

(2 × 1) (2)

8.3 A block of brass must be shaped to fit in a hole. The block of brass has a mass of 150 kg and it is heated from 25 °C to 650 °C. The specific heat capacity of brass is 380 J.kg°C.

Calculate the amount of heat energy required to raise the temperature of the block of brass. (2)

8.4 A steel measuring tape is 149,925 m long at a temperature of 18 °C and changes to 150,005 m at a temperature of 34 °C.

8.4.1 Calculate the difference in temperature.

8.4.2 Calculate the difference in length in mm.

(2 × 1) (2)

8.5 A strip of steel and a strip of copper is riveted to each other.

8.5.1 What is the name of the strip described?

8.5.2 What effect is demonstrated by the strip described?

(2 × 1) (2)

Copyright reserved

8.6 Thermometers are used to measure temperature. Two basic types, namely alcohol and mercury thermometers, are used.

8.6.1 Write down ONE disadvantage of a mercury thermometer. (1)

8.6.2 Write down ONE advantage of an alcohol thermometer. (1)

[13]

QUESTION 9

9.1 Matter has different properties in different phases. The table below gives a summary of those properties. Some of the properties are omitted. Complete the table by writing only the answer next to the question number (9.1.1–9.1.3) in the ANSWER BOOK. (e.g.: 9.1.1 Atom)

Properties of matter	Solid	Liquid	Gas
Energy and movement of particles	Low energy; particles vibrate around a fixed point.	9.1.1	Particles have high energy and are constantly moving.
Spaces between particles	Very little space between particles. Particles are packed tightly together.	More space between particles than a solid but less space than in a gas.	9.1.2
Forces between particles	9.1.3	Weaker forces than in a solid. Liquid takes the shape of the container it is in.	Weak forces because of large distance between them. Gas fills the volume of the container it is in.

(3 × 1) (3)

9.2 Draw a neat labelled sketch that shows the structure of a helium atom.

HINT: The atomic number of helium is 2. (3)

9.3 When heat is added or removed to matter it changes phase. Name the process in the following cases:

9.3.1 Heat is removed from a gas and it changes to a liquid.

9.3.2 Heat is added to a solid and it changes to a liquid.

(2 × 1) (2)

[8]

QUESTION 10

10.1 Different materials react differently to electricity.

Indicate whether the following are conductors or insulators.

10.1.1 Aluminium

10.1.2 Rubber

10.1.3 Carbon

(3 × 1) (3)

10.2 Standardised symbols are used to represent components in a circuit.

Draw the IEC symbols for the following components of an electrical circuit:

10.2.1 A variable resistor

10.2.2 A battery

10.2.3 A switch

(3 × 1) (3)

10.3 The element in an electrical kettle has a resistance of 14 Ω when a current of 15 A flows through the element.

Calculate the following:

10.3.1 The voltage applied to the circuit

10.3.2 The power consumption of the element

(2 × 2) (4)

10.4 Calculate the total resistance of the circuit in FIGURE 8.

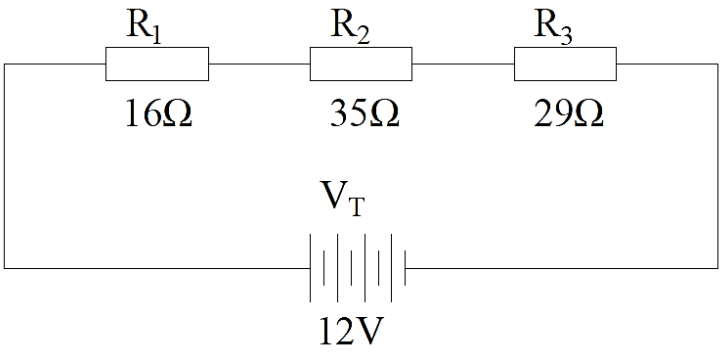

FIGURE 8 (2)

10.5 Name THREE factors that will influence the resistance of a conductor. (3)

10.6 A change in temperature has an effect on current carrying materials.

If a conductor like copper is heated, what will happen with the current if the voltage remains constant? (1)

10.7 The heating element of a geyser has a resistance of 20 Ω.

If a current of 11 A flows for 15 minutes, what will the generated heat energy be? (2)

10.8 Draw the magnetic field around a bar magnet. (3)

10.9 A solenoid can be used in an electric bell.

Name TWO ways in which the strength of the magnetic field can be increased. (2)
[23]

TOTAL SECTION B: 80
GRAND TOTAL: 100

Copyright reserved

(15070391)

ENGINEERING SCIENCE N1

FORMULA SHEET

Any applicable formula may be used.

1.	$v = \frac{s}{t}$	
2.	$F = m.g$	
3.	$VV = \frac{M_{afst}}{L_{afst}}$	$DR = \frac{E_{dist}}{L_{dist}}$
4.	$HV = \frac{L}{M}$	$MA = \frac{L}{E}$
5.	$SV = \frac{D}{d}$	$VR = \frac{D}{d}$
6.	$Moment = F.s$	
7.	$T = F.r$	
8.	$W = F.s$	
9.	$P = \frac{W}{t}$	
10.	$P = F.v$	
11.	$Q = m.c.\Delta t$	
12.	$L_f = L_o + \Delta L$	
13.	$L_f = L_o - \Delta L$	
14.	$I = \frac{V}{R}$	
15.	$R_t = R_1 + R_2 + \ ...$	
16.	$\frac{1}{R_t} = \frac{1}{R_1} + \frac{1}{R_2} + \cdots$	
17.	$Heat = I^2.R.t$	
18.	$P = V.I$	
19.	$P = \frac{V^2}{R}$	
20.	$P = I^2.R$	

Copyright reserved