higher education & training

Department:
Higher Education and Training
REPUBLIC OF SOUTH AFRICA

NATIONAL CERTIFICATE (VOCATIONAL)

ELECTRONIC CONTROL AND DIGITAL ELECTRONICS
NQF LEVEL 4

(12041024)

12 November 2024 (X-paper)
09:00–12:00

This question paper consists of 8 pages and a 1 page formula sheet.

059Q1N2412

Copyright reserved

DEPARTMENT OF HIGHER EDUCATION AND TRAINING
REPUBLIC OF SOUTH AFRICA

NATIONAL CERTIFICATE (VOCATIONAL)
ELECTRONIC CONTROL AND DIGITAL ELECTRONICS
NQF LEVEL 4
TIME: 3 HOURS
MARKS: 100

INSTRUCTIONS AND INFORMATION

1. Answer all the questions.
2. Read all the questions carefully.
3. Number the answers according to the numbering system used in this question paper.
4. Use only a black or blue pen.
5. Write neatly and legibly.

Copyright reserved

QUESTION 1

1.1 A pure inductance of 110 mH is connected in parallel with a 20 µF capacitor and the network is connected to a 100 V, 50Hz supply.

Calculate the following:

1.1.1 The branch currents (4)

1.1.2 The supply current (2)

1.1.3 Circuit impedance (1)

1.1.4 Current phasor diagram (3)

1.2 FIGURE 1 below shows the conditions that take place during resonance.

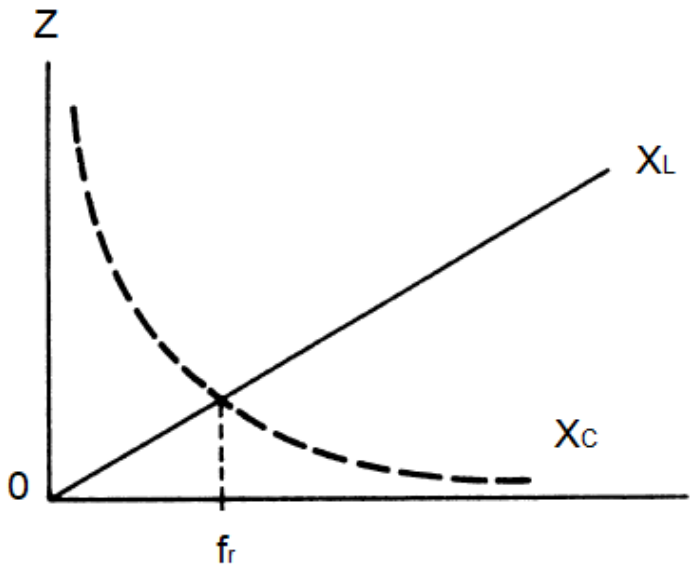

FIGURE 1

1.2.1 Define the term, *resonance*. (2)

1.2.2 List the THREE conditions of resonance. (3)

1.3 Various options are given as possible answers to the following questions. Choose the answer and write only the letter (A–D) next to the question number (1.3.1–1.3.5) in the ANSWER BOOK.

1.3.1 In a certain resonance circuit, V_C = 150 V, V_L = 150 V and V_R = 50 V. What is the value of the source voltage?

A 150 V
B 300 V
C 50 V
D 350 V



1.3.2 The total reactance of series RLC circuit at resonance:

A Zero
B Capacitive
C Equal to the resistance
D Infinity

1.3.3 The phase angle of a series RLC circuit at resonance:

A + 90°
B ± 90°
C 0°
D Depends on the reactance

1.3.4 The ideal total current in the L and C branches of a parallel circuit at resonance:

A Maximum
B Low
C High
D Zero

1.3.5 The impedance at resonance frequency of a series RLC circuit with L = 15 mH, C = 0.015 µF and R = 80 Ω:



A 30 Ω
B 15 kΩ
C 80 Ω
D 0 Ω

(5 × 1) (5)
[20]

Copyright reserved

QUESTION 2

2.1 Name FIVE of the PIN connections on a 555 timer IC. (5)

2.2 Describe the basic difference between *Colpitts* and *Hartley* oscillators. (2)

2.3 Given the circuit values:

L1 = 750 µH
L2 = 550 mH
C = 150 pF,

Calculate the oscillation frequency for the transistor Hartley oscillator circuit. (5)

2.4 Refer to FIGURE 2 below. From the collector characteristic curve and the DC load line, determine the following:

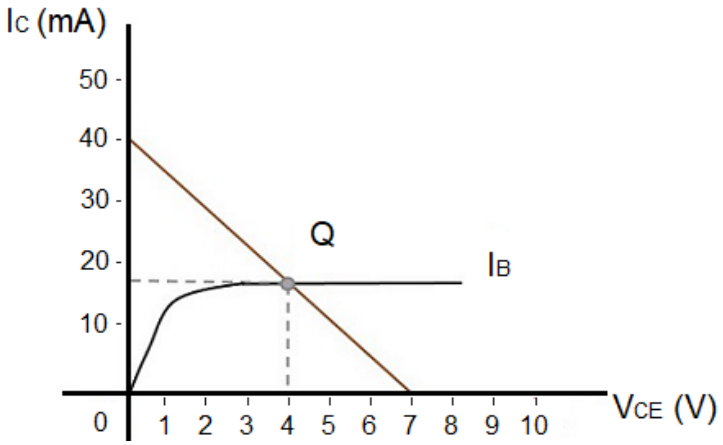

FIGURE 2

2.4.1 Collector saturation current value (1)

2.4.2 Value of V_{CE} at cutoff (1)

2.4.3 When a transistor is used as a switching device, in what two states or mode does it operate? (2)

2.4.4 Name the TWO conditions that produce the active region. (2)

2.4.5 In which region is V_{CE} equal to V_{CC}? (1)

2.5 Draw a block diagram of an inverter power supply. (5)

2.6 SCR in forward conduction mode can be turned off by reducing the value of current below the minimum value.

2.6.1 List FOUR SCR applications. (4)

2.6.2 Name the methods for turning OFF the SCR. (2)

[30]

Copyright reserved

QUESTION 3

3.1 Refer to FIGURE 3 below. Evaluate the most likely failure in the circuit for each of the following symptoms and state the corrective action that one would take in each case (Important: assume all components are correctly connected for this exercise).

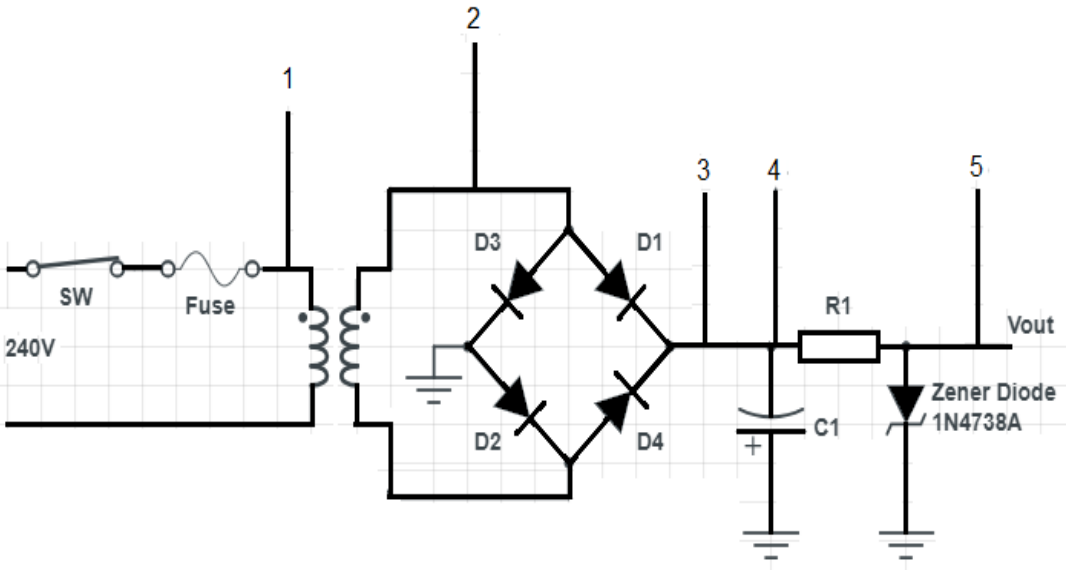

FIGURE 3

3.1.1 No voltage across the primary

3.1.2 No voltage at point 2

3.1.3 No voltage at point 3

3.1.4 No voltage at point 5

3.1.5 Output voltage out of range and/or unregulated

(5 × 2) (10)

3.2 Analyse the circuit in FIGURE 3 and answer the following questions:

3.2.1 Name ONE component that is incorrectly connected. (1)

3.2.2 Indicate the functions of the following components:

A C1
B Zener diode

(2)

3.3 Compile a basic parts list for the components of a DC power supply shown in FIGURE 3. (7)

[20]

Copyright reserved

QUESTION 4

4.1 Choose a description from COLUMN B that matches a word in COLUMN A. Write only the letter (A–E) next to the question number (4.1.1–4.1.5) in the ANSWER BOOK.

COLUMN A		COLUMN B	
4.1.1	Commutative law of multiplication	A	8421 / 2421
4.1.2	Binary coded decimals	B	store and shift data
4.1.3	Decoder	C	the octal number system
4.1.4	Number system with eight as the base	D	AB = BA
		E	BCD to decimal
4.1.5	Shift register		

(5 × 1) (5)

4.2 Draw the logic circuit of the expression: $\overline{A}\,(B + C)$. (3)

4.3 Convert decimal 947 to BCD (2421) code. (2)

4.4 List ONE principal function performed by a shift register. (1)

4.5 State FOUR factors or features to consider when planning application software installation. (4)

[15]

QUESTION 5

5.1 Indicate whether the following statements are TRUE or FALSE by writing only 'True' or 'False' next to the question number (5.1.1–5.1.6) in the ANSWER BOOK.

5.1.1 A power supply is the component that makes the programmable logic controller work.

5.1.2 The correct sequence for PLC operation is self-test, input scan, logic scan, output scan.

5.1.3 Before PLCs were created, many industries used relays.

5.1.4 A programming language that uses symbols resembling elements used in hard-wired control line diagrams is referred to as a statement list.

5.1.5 A PLC internally operates, stores, and calculates the value in decimal format.

5.1.6 Problems with interface wiring may be considered a communication fault.

(6 × 1) (6)

Copyright reserved

5.2 Refer to the start-stop control PLC operation of an AC motor in FIGURE 4 below. Give a detailed description of the operating status (on or off) of the motor and the two indicators under the following conditions:

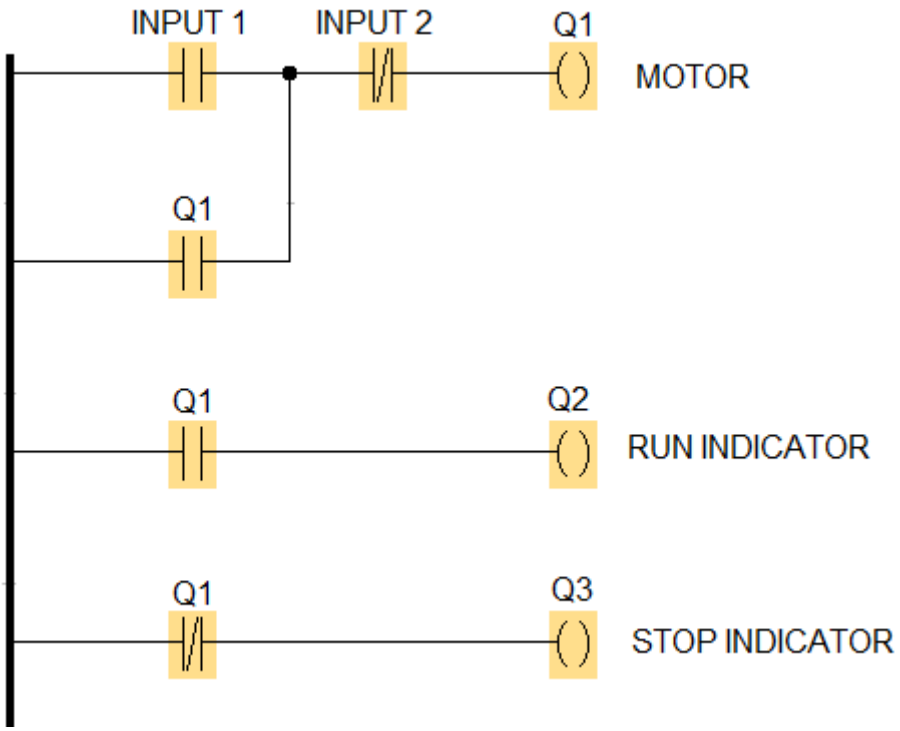

FIGURE 4

5.2.1 When input 1 push-button has not been activated (3)

5.2.2 When input 1 push-button is activated (3)

5.2.3 When input 2 push-button is activated (3)

[15]

TOTAL: 100

Copyright reserved

(12041024)

FORMULA SHEET

AC theory

$$X_C = \frac{1}{2\pi fc}$$

$$X_L = 2\pi fL$$

$$z = \sqrt{R^2 + (X_L - X_C)^2}$$

$$\emptyset = \tan^{-1}\frac{X_L - X_C}{R}$$

$$I_T = \sqrt{{I_R}^2 + (I_C - I_L)^2}$$

$$f_c = \frac{1}{2\pi RC}$$

$$f_r = \frac{1}{2\pi\sqrt{LC}}$$

$$Q = \frac{X_L}{R} = \frac{X_C}{R}$$

$$I = \frac{V}{R}$$

$$f_o = \frac{1}{2\pi RC\sqrt{2n}}$$

$$C_t = \frac{c_1 \times c_2}{c_1 + c_2}$$

$$f_o = \frac{1}{2\pi\sqrt{R_1R_2C_1C_2}}$$

Fundamental of electronics

$$B_W = \frac{f_r}{Q}$$

$$\beta = \frac{I_C}{I_B}$$

$$I_B = \frac{V_{BB} - V_{BE}}{R_B}$$

$$I_C = \frac{V_{CC}}{R_C}$$

Copyright reserved