higher education & training

Department:
Higher Education and Training
REPUBLIC OF SOUTH AFRICA

NATIONAL CERTIFICATE

BUILDING SCIENCE N3

(15070023)

21 November 2024 (X-paper)
09:00–12:00

Drawing instruments and nonprogrammable calculators may be used.

This question paper consists of 7 pages and 1 formula sheet.

056Q1E2421

Copyright reserved

DEPARTMENT OF HIGHER EDUCATION AND TRAINING
REPUBLIC OF SOUTH AFRICA

NATIONAL CERTIFICATE
BUILDING SCIENCE N3
TIME: 3 HOURS
MARKS: 100

INSTRUCTIONS AND INFORMATION

1. Answer all the questions.
2. Read all the questions carefully.
3. Number the answers according to the numbering system used in this question paper.
4. Round off intermediate and final calculations to TWO decimals.
5. Assume that acceleration due to gravity (*g*) is 9,81m/s^2.
6. Use only a black or blue pen.
7. Write neatly and legibly.

Copyright reserved

QUESTION 1

1.1 What is the most important ingredient used to 'glue' together the particles of stone and sand (aggregates) to form a solid mass that is called concrete? (2)

1.2 What is the effect of the water-to-cement ratio on the strength of concrete? (2)

1.3 Name SIX ways to improve the workability of concrete. (6)

[10]

QUESTION 2

2.1 FIGURE 1 shows a simply supported beam carrying a uniformly distributed load.

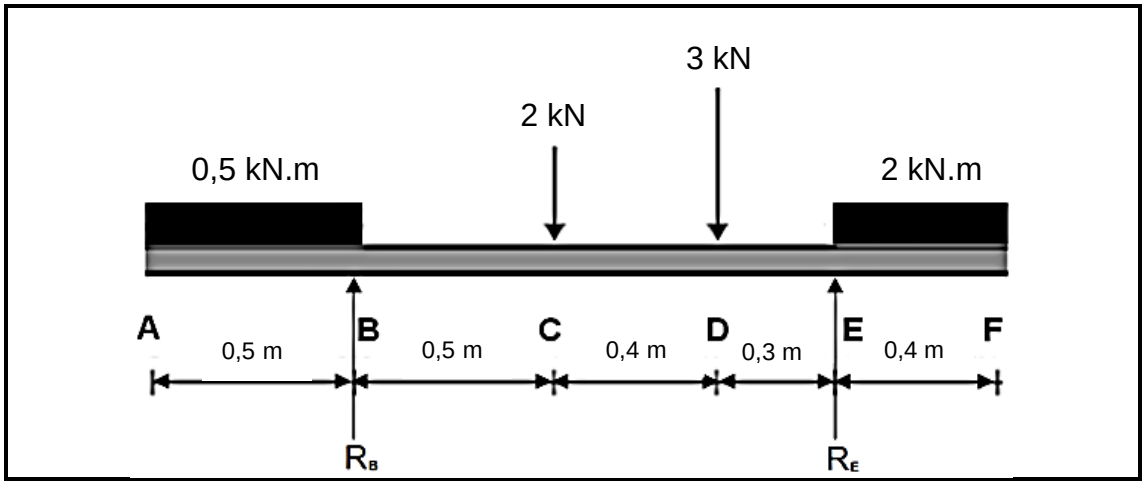

FIGURE 1

Calculate:

2.1.1 The reaction R_E

2.1.2 The reaction R_B

(2 × 2) (4)

2.2 Perform the necessary calculations and draw a shear-force diagram to a suitable linear and force scale. (5)

2.3 Perform the necessary calculations and draw a bending-moment diagram to a suitable linear and moment scale. (6)

[15]

Copyright reserved

QUESTION 3

3.1 Define the term *couple*. (2)

3.2 FIGURE 2 shows a plane laminar.

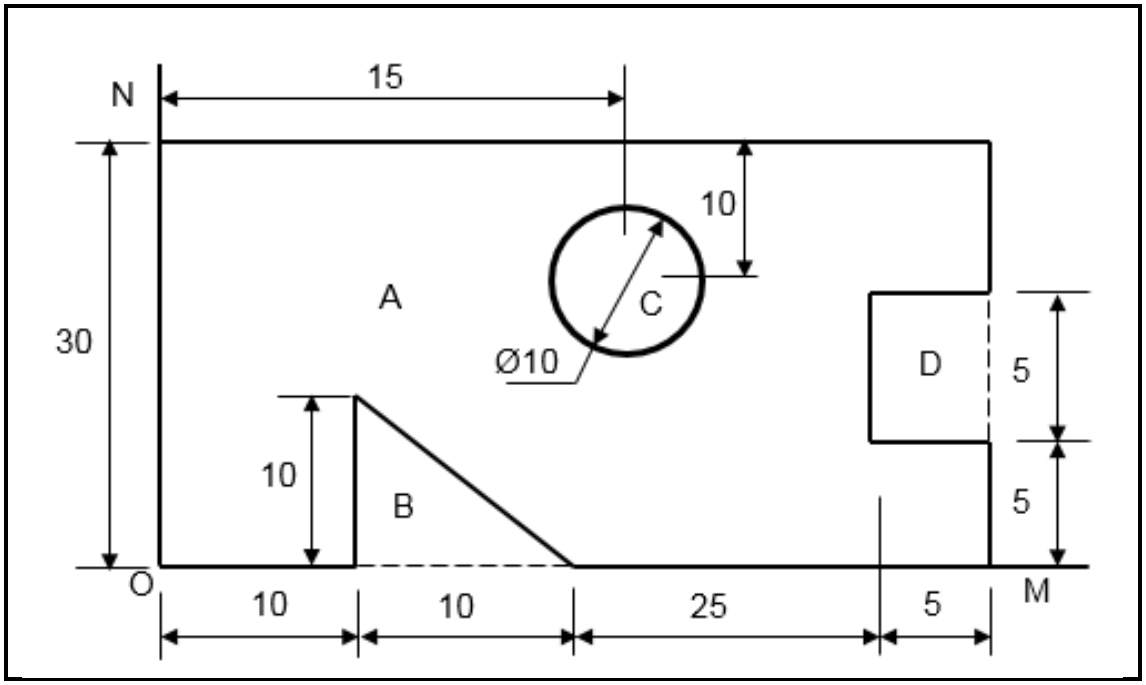

FIGURE 2

Calculate the position of the centroid with respect to OM and ON respectively. Present your calculations in tabular form as shown below. Note that the material on sections B, C and D on the plane laminar is removed. All dimensions on the laminar are in millimetres.

SHAPE	AREA [mm^2]	X [mm]	Y [mm]	MOMENT AX [mm^3]	MOMENT AY [mm^3]
A					
B					
C					
D					

(18)
[20]

QUESTION 4

4.1 A simply supported roof truss is loaded as shown in FIGURE 3.

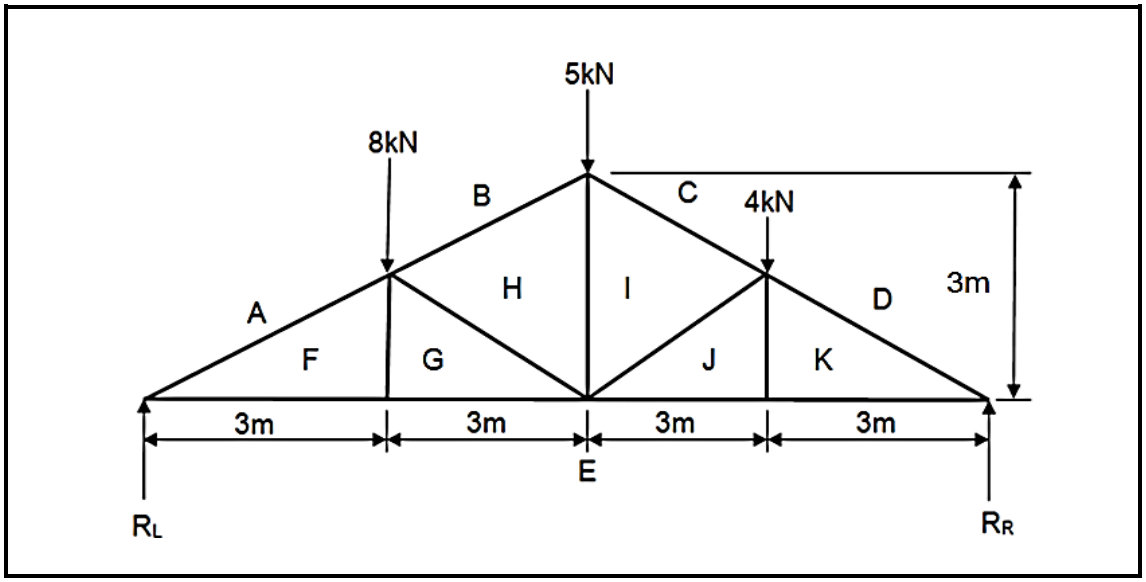

FIGURE 3

Calculate the magnitude of reactions RL and RR respectively. (2)

4.2 Draw a vector diagram and determine the magnitude and nature of the member forces tabulated below. Redraw the table and indicate the nature and magnitude of the members. Use scales 1 cm = 1 m and 1 cm = 1 kN.

MEMBER	MAGNITUDE (kN)	NATURE
AF		
BH		
CI		
DK		
EF		
EG		
FG		
GH		
HI		
IJ		
EJ		
JK		
EK		

(18)
[20]

QUESTION 5

5.1 Define *Ohm's law*. (3)

5.2 What is the purpose of the earth wire in an electrical circuit? (2)

5.3 FIGURE 4 shows a parallel circuit.

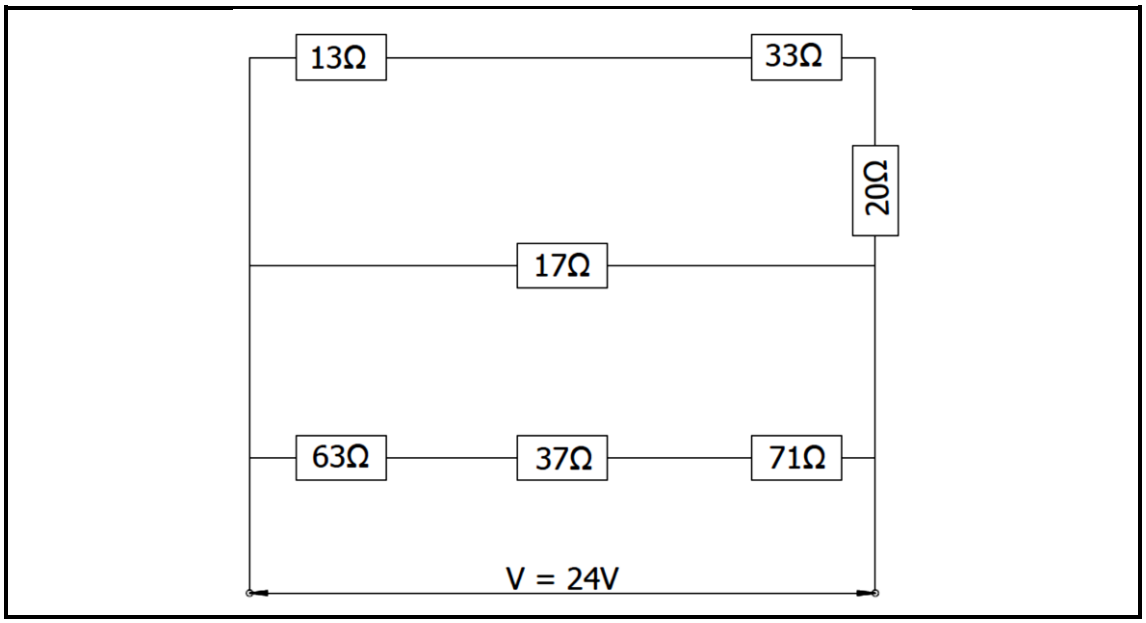

FIGURE 4

Calculate the total resistance in the circuit. (6)
[11]

QUESTION 6

A 55 kg bag of rubble is placed on an inclined plane 30° with the horizontal. Assume that the coefficient of friction is 0,5.

Calculate:

6.1 The component of the weight of the bag parallel to the plane

6.2 The component of the weight of the bag perpendicular to the plane

6.3 The frictional force

6.4 The smallest force parallel to the plane that will move the block upwards

(4 × 3) **[12]**

QUESTION 7

The legs of a tripod are each 8 m in length. The lower ends (feet) are on the same horizontal plane and form an isosceles triangle ABC in which AB = AC = 6 m.

Determine the force in the legs due to a 30 kN force supported from the apex of the tripod. **[12]**



TOTAL: 100

Copyright reserved

FORMULA SHEET

Any other applicable formula may also be used.

1. $F = m \times g$

2. $A = \frac{\pi D^2}{4}$

3. $F\mu = \mu \times W$

4. $\mu = \tan\phi$

5. Comp. $* = W\sin\phi$

6. Comp. $\zeta = W\cos\phi$

7. $F1 = \mu W\cos\phi + W\sin\phi$

8. $F\mu = \mu W\cos\phi$

9. $F2 = \mu W\cos\phi - W\sin\phi$

10. $s = ut + \frac{1}{2}at^2$

11. $v = u \pm 2as$

12. $v = u^2 \pm at$

13. $M = m \times v$

14. $m \times u = m \times v$

15. $VR = \frac{Effort\ distance}{Load\ distance}$

16. $MA = \frac{Load}{Effort}$

17. $n = \frac{HV}{SV} \times 100$

18. $V = I \times R$

19. $R_T = R_1 + R_2 + R_3$

20. $\frac{1}{R_T} = \frac{1}{R_1} + \frac{1}{R_2} + \frac{1}{R_3}$

21. $P = V \times I$

22. $W = P \times t$

23. $WD = F \times S$

24. $MOM = F \times \zeta S$

25. $A = L \times B$

26. $A = \pi r^2$

27. $A = \frac{1}{2}\ bh\ /\ \frac{1}{2}ab\sin C$

28. $A = 4\pi r^2$

29. $\bar{x} = \frac{4r}{3\pi}$

30. $\bar{x} = \frac{1}{3}h$

31. $R = \sqrt{HC^2 + VC^2}$

32. $\tan\phi = \frac{VC}{HC} / \frac{VK}{HK}$

33. Mass of water in mixture =
water:cement ratio × mass of cement

34. Work done by effort in raising the load =
effort × velocity ratio (VR) × load distance

Copyright reserved