higher education & training

Department:
Higher Education and Training
REPUBLIC OF SOUTH AFRICA

NATIONAL CERTIFICATE (VOCATIONAL)

CIVIL AND STRUCTURAL STEEL WORK DETAILING

(First paper)

NQF LEVEL 3

(12050663)

12 November 2024 (Y-paper)
13:00–15:00

REQUIREMENTS: **Hot-rolled structural steel sections (BOE 8/2)**
A4 drawing sheets

Drawing instruments may be used.

This question paper consists of 5 pages and 5 addenda.

053Q1N2412

Copyright reserved

DEPARTMENT OF HIGHER EDUCATION AND TRAINING
REPUBLIC OF SOUTH AFRICA

NATIONAL CERTIFICATE (VOCATIONAL)
CIVIL AND STRUCTURAL STEEL WORK DETAILING
NQF LEVEL 3
(First paper)
TIME: 2 HOURS
MARKS: 75

INSTRUCTIONS AND INFORMATION

1. Answer all the questions.
2. Read all the questions carefully.
3. Number the answers according to the numbering system used in this question paper.
4. Drawings and sketches must be done neatly using drawing instruments.
5. Use only a black or blue pen for written work. A pencil may be used for drawing.
6. Write neatly and legibly.

Copyright reserved

QUESTION 1: GENERAL

1.1 Name the strength that occurs in each of the concrete structures shown in FIGURE 1, ADDENDUM B (attached) by writing only the answer next to the question number (1.1.1–1.1.3) in the ANSWER BOOK. (3)

1.2 Explain the following description for dimensioning reinforcing bars:

16 R12 – 05 – 150T (3)

1.3 Indicate whether the following statements are TRUE or FALSE by writing only 'True' or 'False' next to the question number (1.3.1–1.3.5) in the ANSWER BOOK.

1.3.1 Isolated footing is one of the types of footing.

1.3.2 Stirrup is the point at which a material begins to deform permanently.

1.3.3 Fiberglass is used for formwork.

1.3.4 A retaining wall is a temporary structure or mould into which newly mixed concrete is placed and compacted to harden.

1.3.5 Corrosion is a process that helps concrete cure.

(5 × 1) (5)

1.4 Draw freehand sketch in good proportion of a simply supported reinforced concrete beam showing the main tensile reinforced bar position. (4)

[15]

QUESTION 2: REINFORCED CONCRETE DETAILING

2.1 A bending schedule is also known as a bar schedule.

Name THREE advantages of a bar-bending schedule. (3 × 2) (6)

2.2 Name any TWO different types of steel reinforcement. (2)

2.3 FIGURE 2 on ADDENDUM B (attached) shows a cross-section of a pad foundation concrete structure, which includes a slab and column. Note that the total number of pad foundations is four sets.

Study FIGURE 2 on ADDENDUM B (attached) and complete the bending schedule on ADDENDUM E (attached) with the given specifications. Write your EXAMINATION NUMBER in the spaces provided, detach the page from the QUESTION PAPER and hand it in with the ANSWER BOOK. (12)

NOTE: Ignore the length of each bar.
ADDENDUM A (attached) provides a shape code table.

[20]

Copyright reserved

QUESTION 3: STRUCTURAL STEELWORK DETAILING

3.1 Choose a description from COLUMN B that matches an item in COLUMN A. Write only the letter (A–F) next to the question number (3.1.1–3.1.5) in the ANSWER BOOK.

COLUMN A		COLUMN B	
3.1.1	Cleat	A	metal plates at intersections to transfer loads between members
3.1.2	Girder	B	the main beams supporting the roof
3.1.3	Rafter	C	the steepness expressed as a ratio of rise per horizontal length, or as the angle in degrees of how a surface deviates from the horizontal
3.1.4	Gusset plate	D	a short length of angle or channel section welded or bolted to a steel member enabling it to be fastened to another member
3.1.5	Pitch	E	load bearing structural members typically running from the top of the truss to the eaves
		F	beam manufactured from plate material and used for large pans

(5 × 1) (5)

3.2 Make TWO freehand drawings of a mono-pitched and a Pratt truss lattice girder and provide a title for each drawing. (4)

3.3 Name TWO disadvantages of steel portal framed structures. (2 × 2) (4)

3.4 Name THREE types of bolts used for connecting structural work, and give the grade for each. (3 × 2) (6)

3.5 3.5.1 Name the labelled parts in the sketch in FIGURE 3 on ADDENDUM C (attached) by writing only the answer next to the letter (A–D) in the ANSWER BOOK. (4)

3.5.2 State the name of the structure in FIGURE 3 on ADDENDUM C (attached). (1)

3.5.3 Which bolts must be used in the structure in QUESTION 3.5.2? (1)

Copyright reserved

3.6 3.6.1 Name parts A to D indicated in FIGURE 4 on ADDENDUM D (attached) by writing only the answer next to the letter (A–D) in the ANSWER BOOK. (4)

3.6.2 State the name of the structure in FIGURE 4, ADDENDUM D (attached). (1)
[30]

QUESTION 4: WELDING

4.1 Name any FIVE metals for which gas metal arc welding is used. (5)

4.2 List any FIVE pieces of protective clothing worn by welders. (5)
[10]

TOTAL: 75

Copyright reserved

ADDENDUM A

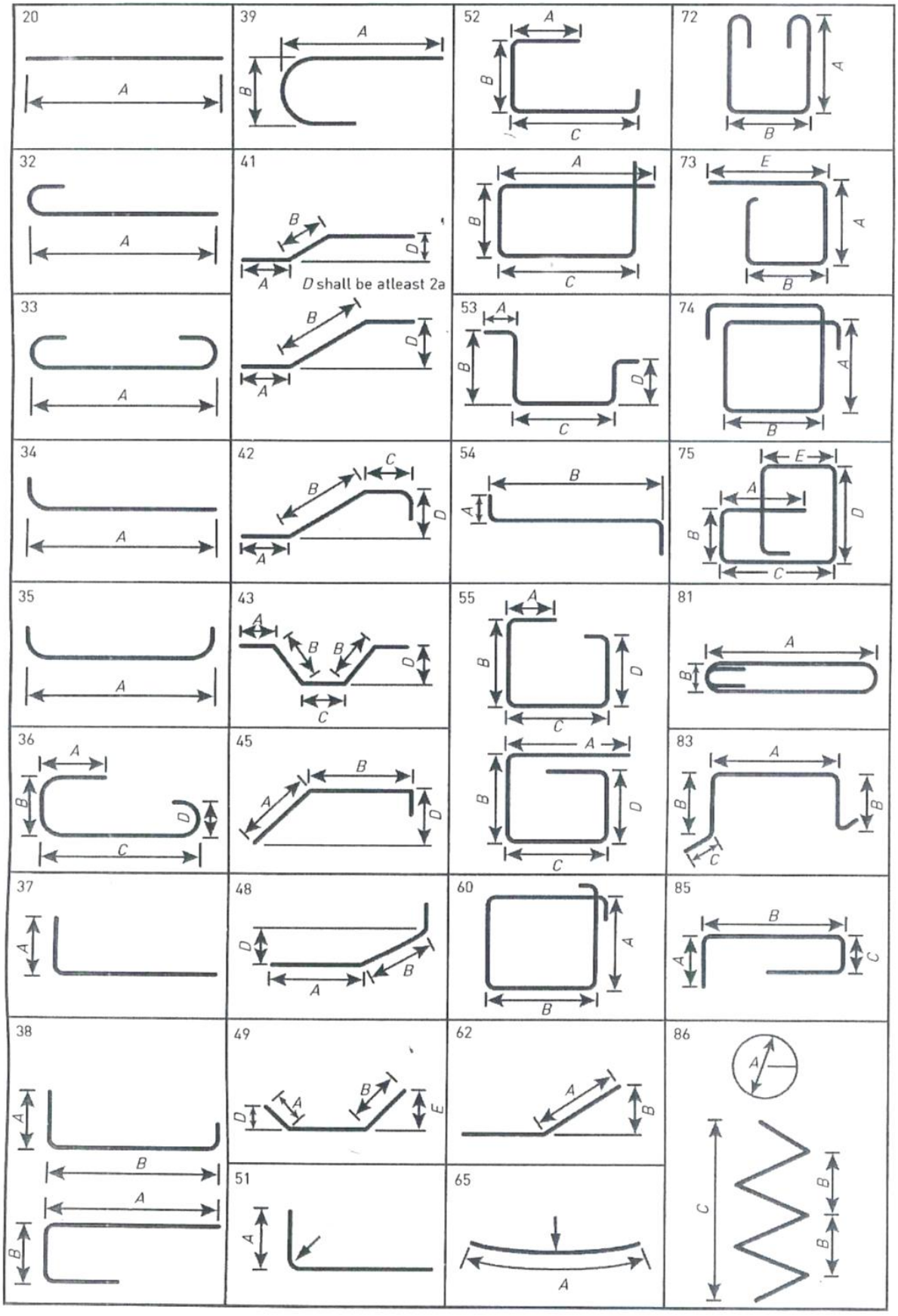

Copyright reserved

ADDENDUM B

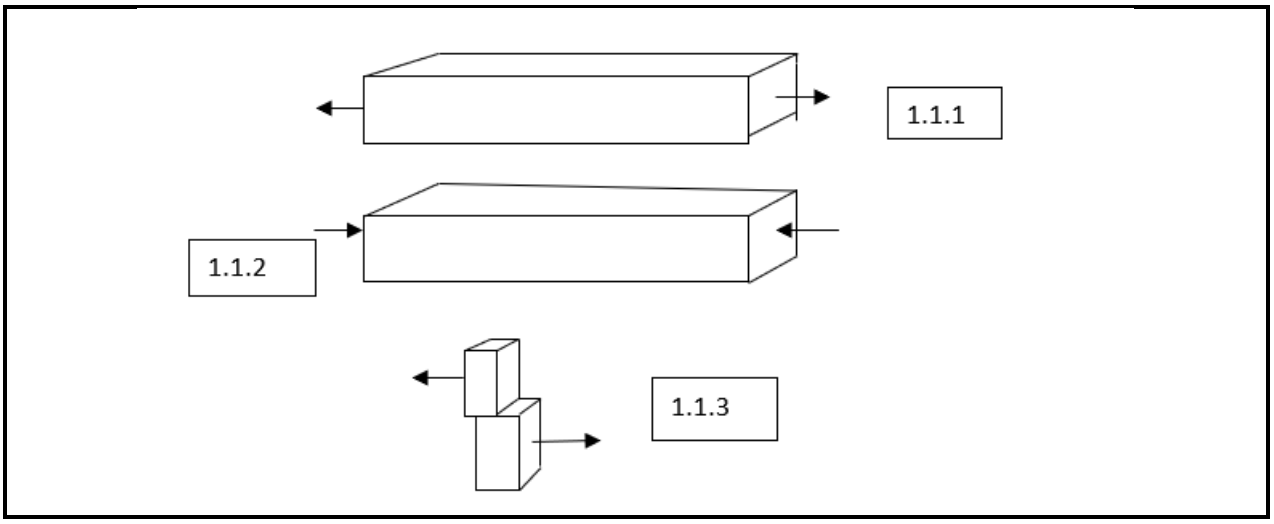

FIGURE 1

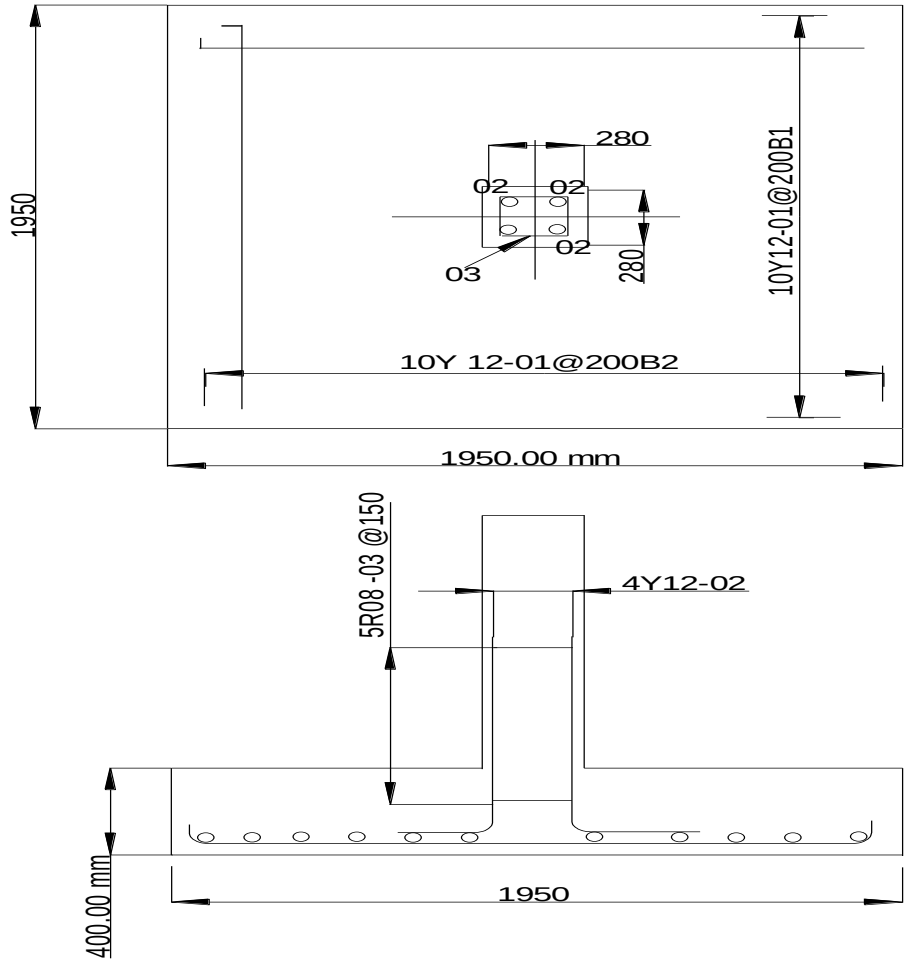

FIGURE 2

Copyright reserved

ADDENDUM C

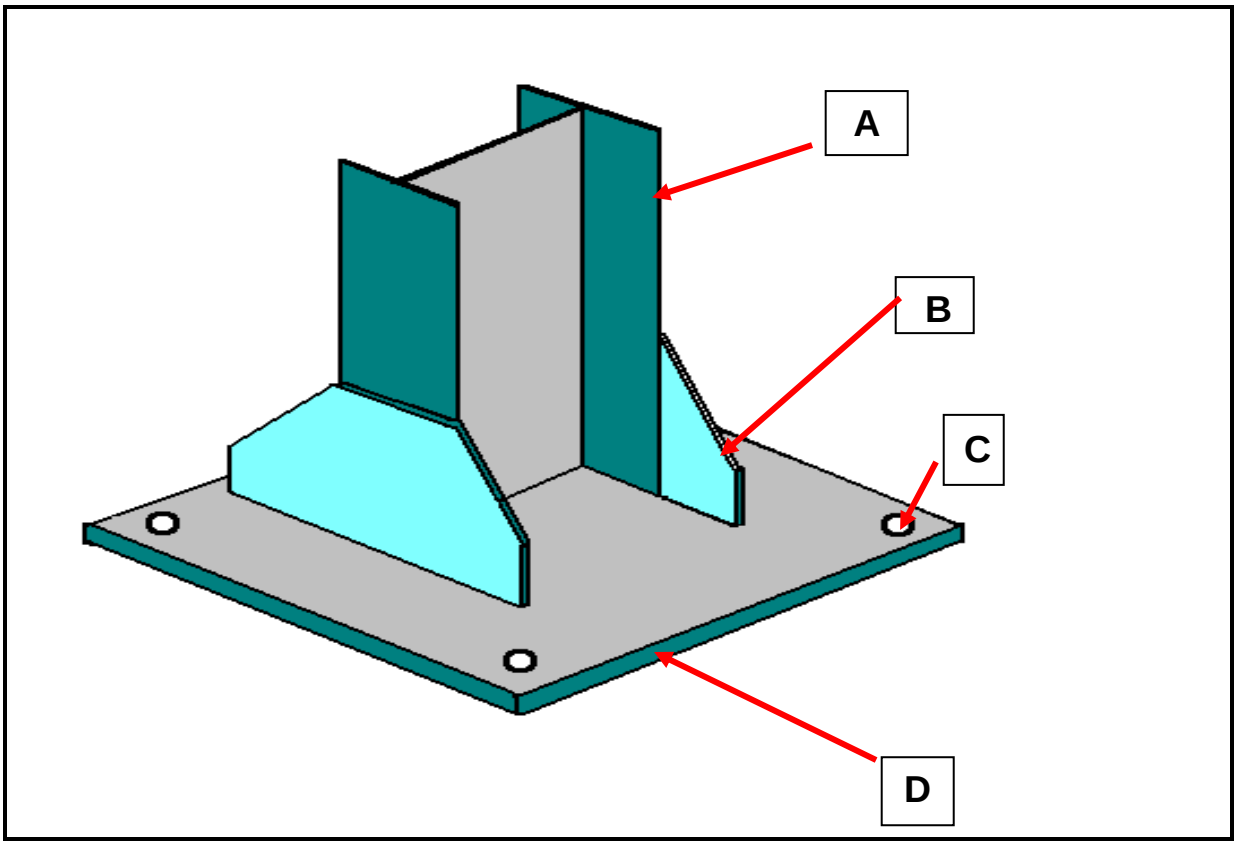

FIGURE 3

Copyright reserved

ADDENDUM D

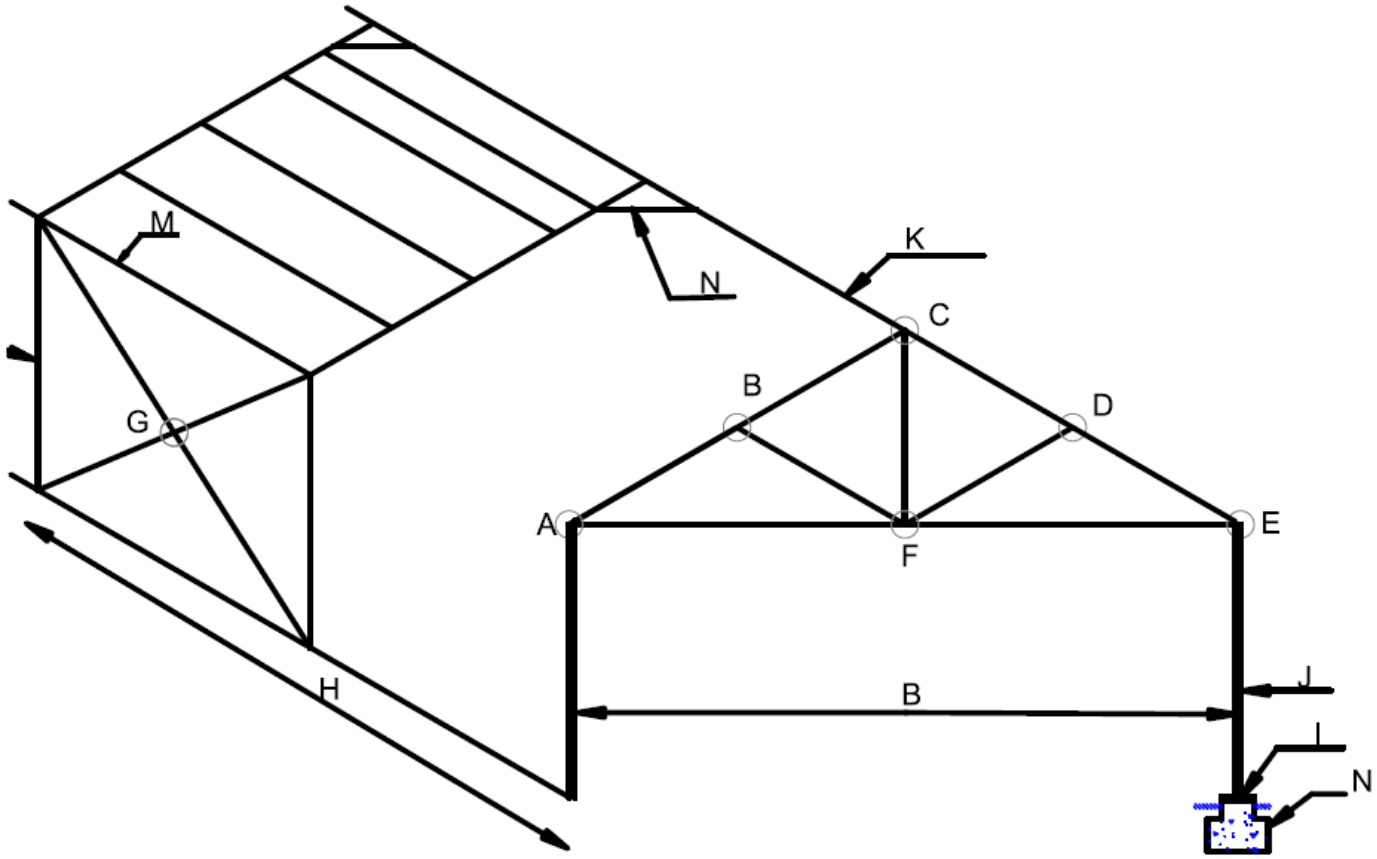

FIGURE 4

Copyright reserved

ADDENDUM E **EXAMINATION NUMBER:**

BENDING SCHEDULE

1 Member	2 Bar mark	3 Type and size	4 Number of Members	5 Number in each	6 Total number	7 Length of each bar	8 Shape
PAD							
COLUMN							

Copyright reserved