higher education & training

Department:
Higher Education and Training
REPUBLIC OF SOUTH AFRICA

NATIONAL CERTIFICATE

PLATING AND STRUCTURAL STEEL DRAWING N3

(8090113)

20 November 2024 (X-paper)
09:00–13:00

REQUIREMENTS: A2 drawing sheet

Drawing instruments and non-programmable calculators may be used.

This question paper consists of 7 pages.

048Q1E2420

Copyright reserved

DEPARTMENT OF HIGHER EDUCATION AND TRAINING
REPUBLIC OF SOUTH AFRICA

NATIONAL CERTIFICATE
PLATING AND STRUCTURAL STEEL DRAWING N3
TIME: 4 HOURS
MARKS: 100

INSTRUCTIONS AND INFORMATION

1. QUESTION 1 is COMPULSORY.
2. Answer any THREE of the other questions.
3. Read all the questions carefully.
4. Number the answers according to the numbering system used in this question paper.
5. Show all construction lines on all the questions.
6. ONE A2 DRAWING SHEET should be used.
7. Draw on both sides of the A2 DRAWING SHEET.
8. Add a title and scale to each answer.
9. Write neatly and legibly.

Copyright reserved

QUESTION 1 (COMPULSORY)

FIGURE 1 below shows two views of an incomplete square-to-round transition piece.

Use scale 1:1 and draw the following:

1.1 The complete given views. (3)

1.2 Calculate the true lengths (showing all calculations on the drawing sheet). Use the numbering system as indicated in the drawing. (11)

1.3 Use the information from QUESTION 1.2 above and develop the half pattern of the transition piece. Open the development on the line marked 'X−X'. (8)

NOTE: No marks will be awarded for true lengths taken from the drawing to scale.

Marks will be allocated for:

Line work	1
Accuracy	2

(3)
[25]

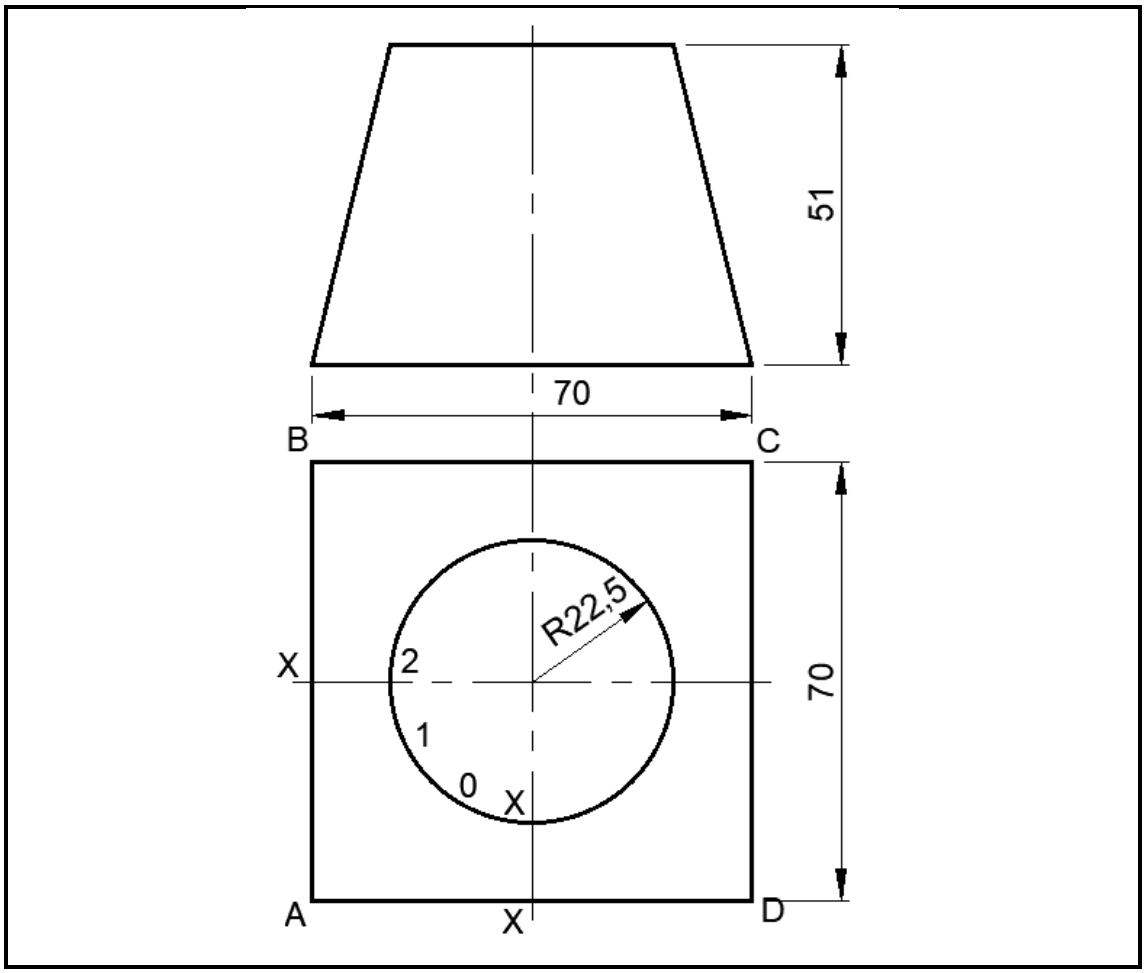

FIGURE 1

QUESTION 2

FIGURE 2, shows two views of a straight-backed junction piece.

Use scale 1:10 and draw the following:

2.1 The given views. (9)

2.2 The half pattern of the straight-backed junction piece. Open the pattern on the line marked 'X–X'. (11)

Marks will be allocated for:

Line work	2
Accuracy	3

(5)
[25]

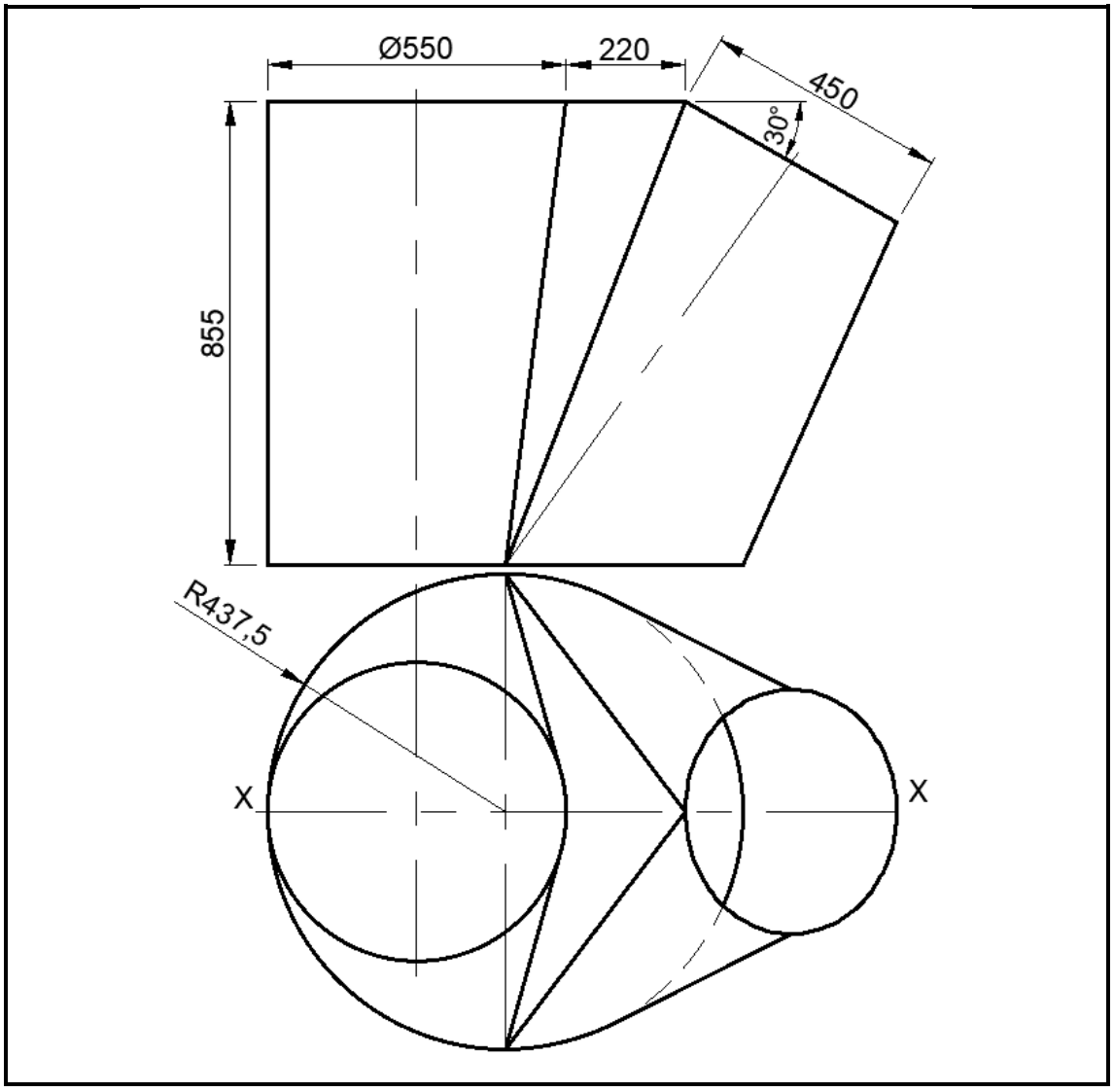

FIGURE 2

QUESTION 3

FIGURE 3, shows the front and the top view of a spiral blade of one revolution.

Use scale 1:10 and draw the following:

3.1 The front view showing all construction line (8)

3.2 The true length of the spiral blade. (4)

3.3 The shape of the plate to manufacture the blade. (8)

Marks will be allocated for:

Line work	2
Accuracy	3

(5)
[25]

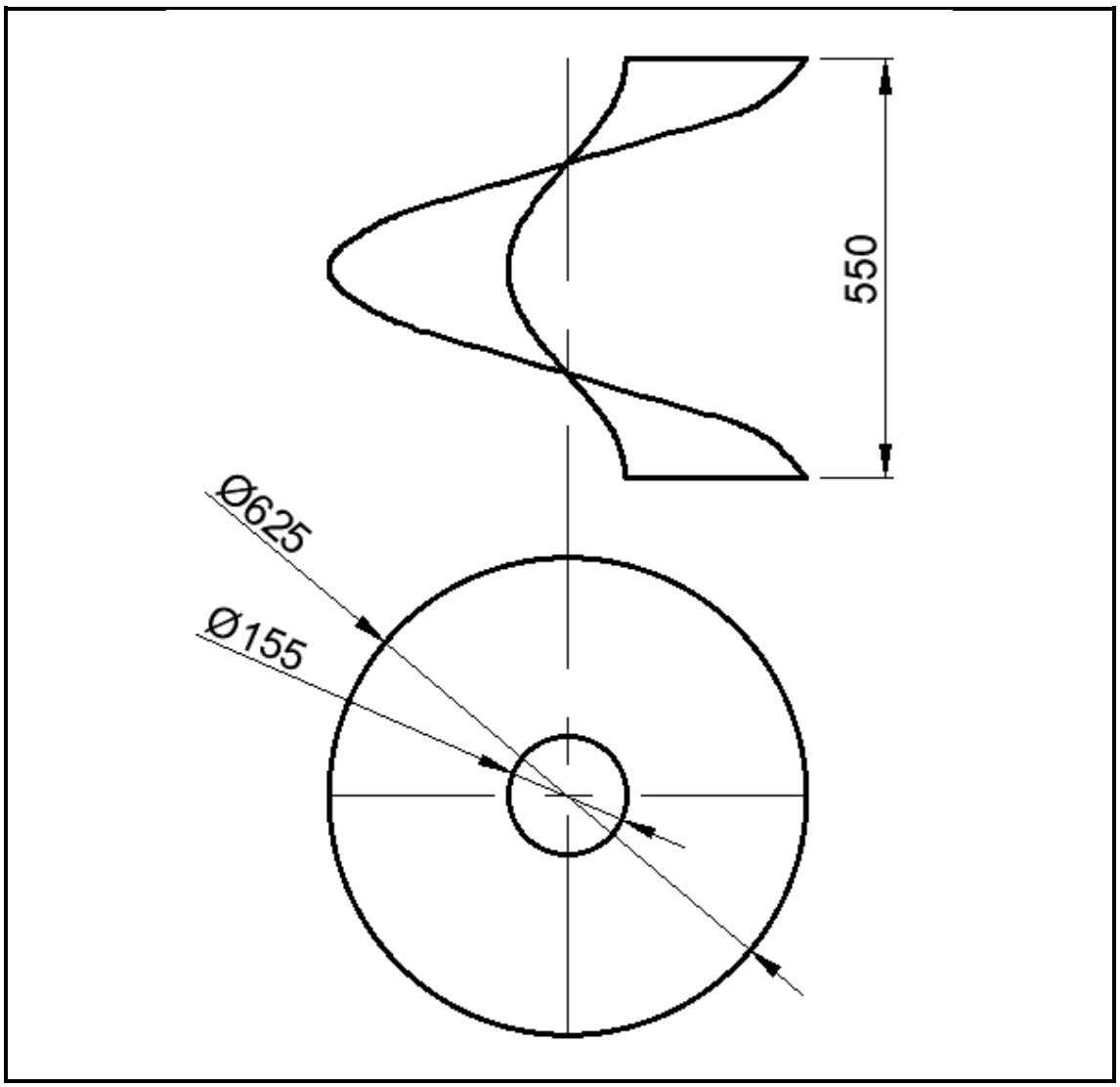

FIGURE 3

QUESTION 4

FIGURE 4, below, shows an oblique intersection between a cone and a cylinder.

Use scale 1:1 and draw the following:

4.1 The elevation and the plan (6)

4.2 The plan including the interpenetration lines between the cone and the pipe (6)

4.3 The interpenetration lines between the cone and the pipe on the elevation (4)

4.4 The pattern of the contour hole (4)

Marks will be allocated for:

Line work	2
Accuracy	3

(5)
[25]

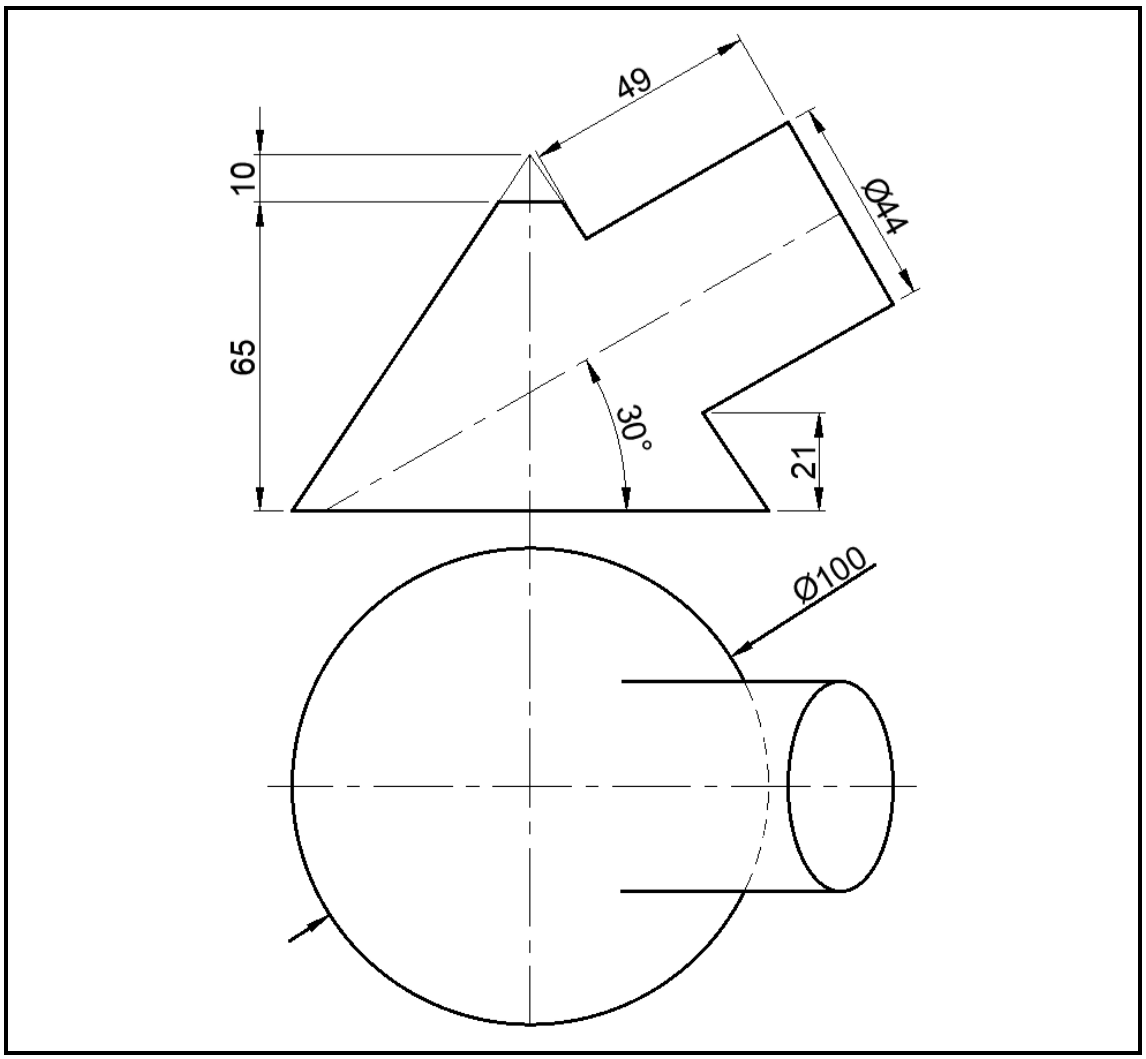

FIGURE 4

QUESTION 5

FIGURE 5, shows an oblique T- piece with a rectangular branch pipe.

Use scale 1:10 and draw the following:

5.1 The given views. (6)

5.2 The line of interpenetration showing all construction lines. (4)

5.3 The shape of the hole in the main. (4)

5.4 The pattern of the plate to manufacture rectangular branch pipe. Open the pattern on the line marked 'X−X'. (7)

Marks will be allocated for:

Line work	2
Accuracy	2

(4)
[25]

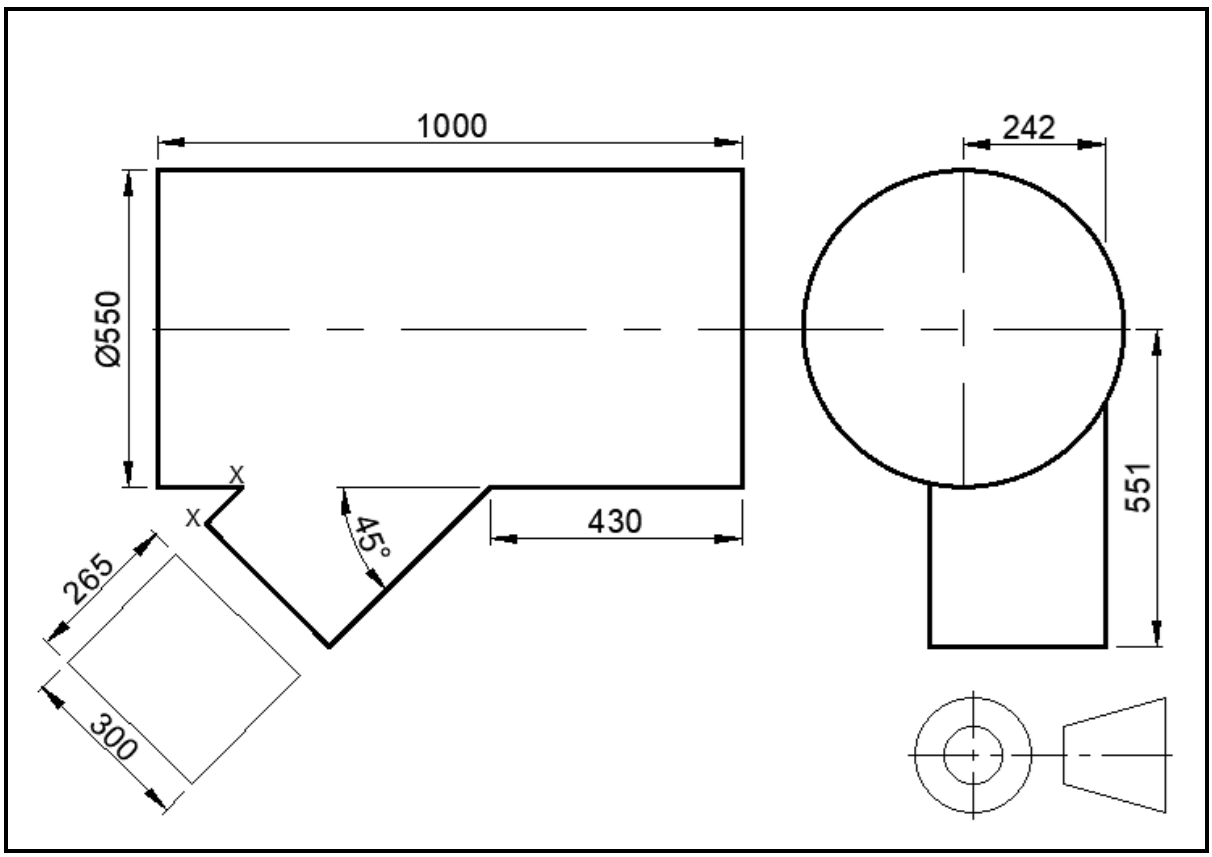

FIGURE 5

TOTAL: 100

Copyright reserved