higher education & training

Department:
Higher Education and Training
REPUBLIC OF SOUTH AFRICA

NATIONAL CERTIFICATE (VOCATIONAL)

CONSTRUCTION PLANNING
NQF LEVEL 3

(12010253)

18 February 2025 (X-paper)
09:00–13:00

REQUIREMENTS: A3 drawing sheets

Drawing instruments may be used.

This question paper consists of 6 pages and 2 diagram sheets.

045Q1S2518

Copyright reserved

DEPARTMENT OF HIGHER EDUCATION AND TRAINING
REPUBLIC OF SOUTH AFRICA

NATIONAL CERTIFICATE (VOCATIONAL)
CONSTRUCTION PLANNING
NQF LEVEL 3
TIME: 4 HOURS
MARKS: 100

INSTRUCTIONS AND INFORMATION

1. Answer all the questions.
2. Read all the questions carefully.
3. Number the answers according to the numbering system used in this question paper.
4. Answer QUESTION 2.2 and QUESTION 2.3 on the DRAWING SHEET.
5. Answer all other questions in the ANSWER BOOK.
6. Produce drawings, sketches and diagrams in pencil.
7. Sketches and/or diagrams must be neat, reasonably large, in proportion and fully labelled.
8. Rule off across the page on completion of each question.
9. Clearly cross out all work you do NOT want to be marked.
10. All abbreviations and symbols must comply with the latest National Building Regulations and all relevant SANS (SABS) codes.
11. Use only a blue or black pen for written answers.
12. Write neatly and legibly.

Copyright reserved

QUESTION 1: COMMUNICATION IN THE CONSTRUCTION INDUSTRY

1.1 Various options are given as possible answers to the following questions. Choose the answer and write only the letter (A–D) next to the question number (1.1.1–1.1.4) in the ANSWER BOOK.

1.1.1 Verbal communication that communicates with clarity and confidence, putting listeners at ease while also informing and persuading them.

A Shaking hands
B Talking professionally
C Nodding head
D Tapping fingers

1.1.2 Which gesture is not a form of verbal communication?

A Facial expressions
B Face-to-face conversation
C Talking over the phone
D Reading out loud

1.1.3 Communication should always be a …-way process.

A one
B two
C three
D four

1.1.4 An example of interference in the channel of communication.

A Source
B Noise
C Feedback
D Feedforward

(4 × 1) (4)

1.2 Poor listening skills are probably the most common barrier to communication.

Name SIX different ways in which you can overcome poor listening. (6)
[10]

QUESTION 2: TECHNICAL DRAWINGS

2.1 Elevations are part of architectural drawings which are used to convey information to the user of the drawing.

Give THREE advantages of elevations. (3 × 2) (6)

2.2 FIGURE 1, DIAGRAM SHEET 1 (attached), shows an isometric view of a block. The front view of the block is represented by the letter C. DO NOT copy the given view but draw to scale 1:1 in first angle orthographic projection the views indicated as A, B and C.
Add the name of the views below the drawing.
This question must be answered on A3 drawing paper. (12)

2.3 FIGURE 2, DIAGRAM SHEET 2 (attached) displays part of a welded hollow metal door frame. Sketch a freehand representation of the given view, twice the original size, ensuring an accurate portrayal. Beneath the sketch, print the title "WELDED HOLLOW METAL DOOR FRAME".

NOTE: This question must be answered on A3 drawing paper. (12)
[30]

QUESTION 3: THE SOUTH AFRICAN CONSTRUCTION INDUSTRY

3.1 In the South African construction industry, trades organisations play a crucial role.

(5)

List any FIVE different trade organisations.

3.2 Which association promotes the prevention of corrosion in steel products? (2)

3.3 Stakeholders play a pivotal role in the construction industry. Their involvement and influence can significantly impact the outcome of construction projects.

Answer the following questions regarding stakeholders:

3.3.1 Give a brief description of a contractor. (2 × 2) (4)

3.3.2 What are the responsibilities of a contractor? (3 × 2) (6)

3.3.3 Describe the sub-contractor as part of the important stakeholders in the construction industry. (3)

3.4 There are several organisations that regulate the South African construction industry.

Give the full names of FIVE important regulatory bodies that control the industry. Exclude the CIDB and NHBRC in your response.

(5 × 2) (10)
[30]

Copyright reserved

QUESTION 4: CONSTRUCTION LEGISLATION AND REGULATIONS

4.1 The local by-laws were used as the main source of regulation before the introduction of the Building Standards Act 103 of 1977.
Give the reasons why the local by-laws were brought under the authority of the National Building Regulations. (3 × 2) (6)

4.2 A competent person is a registered person in the field of home building and construction.

4.2.1 In terms of which act must a competent person be registered. (1 × 2) (2)

4.2.2 State the requirements of a competent person to be appointed to carry out work. (3)

4.3 Acceptance criteria in the construction industry play a crucial role in ensuring the quality and compliance of projects.
Briefly explain the different acceptance criteria used in the construction industry. (3 × 2) (6)

4.4 When government organisations need to hire a contractor for a project, they go through a tendering process.
Briefly explain the requirements for a contractor wishing to tender for public sector work. (2 × 2) (4)

4.5 Choose a description in COLUMN B that matches a term from COLUMN A. Write only the letter (A–F) next to the question number (4.5.1–4.5.5) in the ANSWER BOOK.

COLUMN A		COLUMN B	
4.5.1	SANS 10400	A	Certifies that the design intent has been met on site in terms of NBR and Building Standards Act 103 of 1997
4.5.2	Public sector	B	Ensures that registered builders comply with quality standards and regulations.
4.5.3	14 (2) A form	C	South African National Building Regulations
4.5.4	NHBRC	D	It is controlled by government and involves the delivery of services to the public
4.5.5	Bylaw	E	It is established by the local authority to regulate the building industry of a municipal area.
		F	They are drawn up by the local authority and are unique to a particular area.

(5 × 1) (5)

Copyright reserved

4.6 According to building regulation A19, the owner is obliged to submit information about the person responsible for the design of the structure to the local authority.

List the information required from the owner according to the A19 agreement form. (4)

[30]

TOTAL: 100

Copyright reserved

DIAGRAM SHEET 1

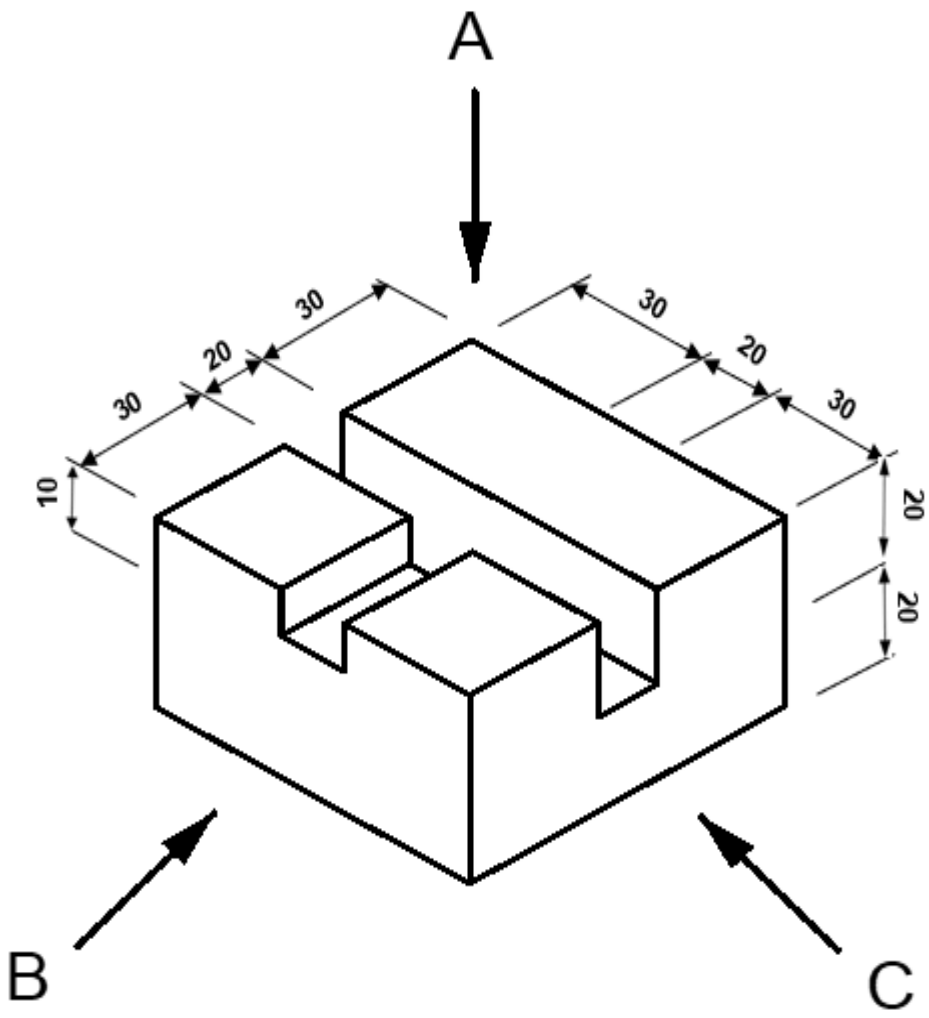

FIGURE 1

Copyright reserved

DIAGRAM SHEET 2

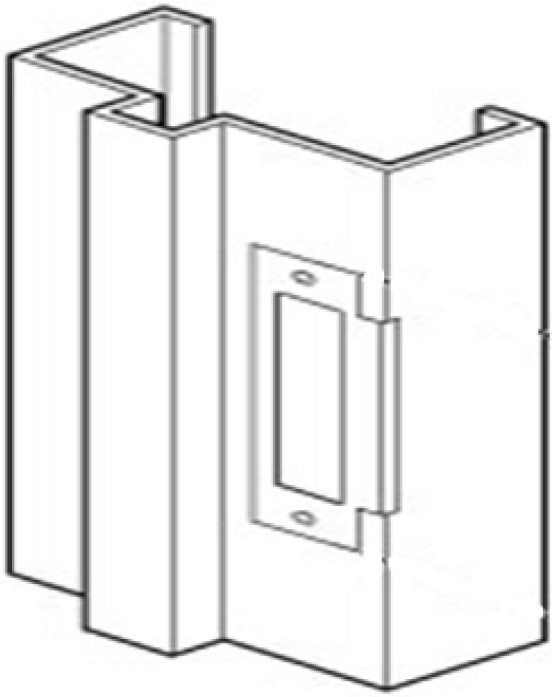

FIGURE 2

Copyright reserved