higher education & training

Department:
Higher Education and Training
REPUBLIC OF SOUTH AFRICA

NATIONAL CERTIFICATE

BUILDING DRAWING N2

(8090012)

20 November 2024 (X-paper)
09:00–13:00

REQUIREMENTS: ONE A2 drawing paper

Drawing instruments and non-programmable calculators may be used.

This question paper consists of 6 pages.

036Q1E2420

Copyright reserved

DEPARTMENT OF HIGHER EDUCATION AND TRAINING
REPUBLIC OF SOUTH AFRICA

NATIONAL CERTIFICATE
BUILDING DRAWING N2
TIME: 4 HOURS
MARKS: 100

INSTRUCTIONS AND INFORMATION

1. Answer all the questions.
2. Read all the questions carefully.
3. Number the answers according to the numbering system used in this question paper.
4. All the drawings must be drawn to the required scale.
5. Use both sides of the drawing paper.
6. All drawings, including candidate's information, must be done in pencil.
7. Ink pen is not allowed.
8. All drawing work must comply with the relevant SANS (SABS) recommended codes.
9. Use your own discretion where dimensions are not given.
10. All the abbreviations and symbols must comply with the latest National Building Regulations and all relevant SANS (SABS) codes.
11. A balance layout is very important and candidates will be penalized for poor planning.
12. The sketches and/or diagrams must be neat, reasonably large, in proportion and fully labelled.
13. All labeling must be written in capital letters.
14. Provide an appropriate title and scale to all drawings.
15. Work neatly.

Copyright reserved

QUESTION 1: FOUNDATION AND FLOORS

A proposed dwelling is to have one-brick external walls and one-brick foundation walls resting on a 600 mm × 220 mm concrete foundation. The external surface of the walls is plastered up to 150 mm below ground level and the internal surface is plastered from floor level upward. The dwelling has a suspended floor. The floor joists rests on a wall plate supported by brick corbeling, two courses high. The bottom of the joist is 800 mm above the concrete foundation which is situated 225 mm below ground level.

Draw, to scale 1:10, a vertical section through the concrete foundation, foundation wall, external wall and suspended floor and show the following:

- 600 mm × 220 mm concrete foundation
- 220 mm thick foundation wall and external wall
- Air brick
- 114 mm × 38 mm wall plate
- 114 mm × 38 mm floor joist
- Two course brick corbeling
- 100 mm × 22 mm tongue and groove floor boards
- 19 mm × 75 mm skirting
- 19 mm quadrant
- 19 mm external and internal plaster
- DPC
- Ant-guard
- Ground level

Show the dimension of the concrete foundation, width of the wall, Height from concrete foundation to bottom of the floor joist and the depth of the top of the concrete foundation from ground level.

[25]

Copyright reserved

QUESTION 2: BRICKWORK

FIGURE 1 below shows the isometric view of a T-junction formed by one-brick walls built in Flemish bond.

Draw, to scale 1:10, the alternate, isometric view of the T-junction.

Label only the Queen closer. Do NOT insert dimensions.

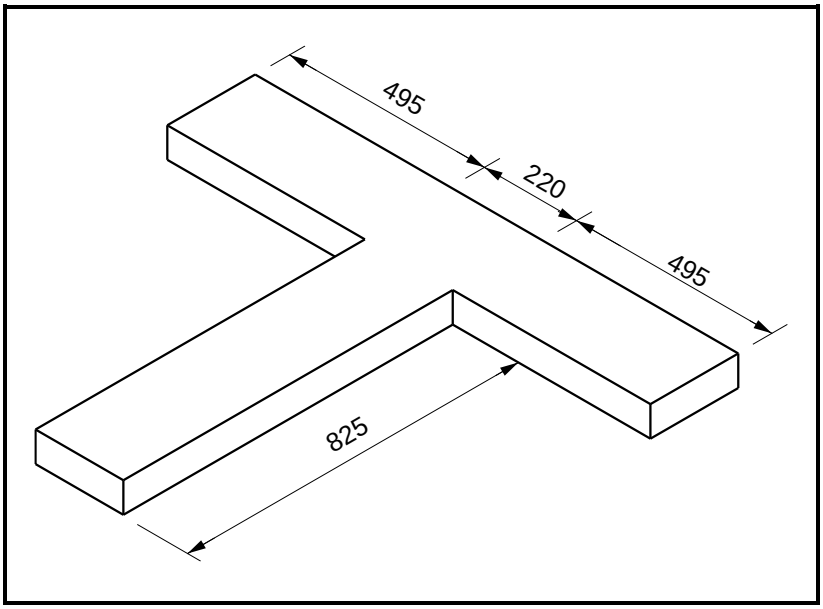

FIGURE 1 **[16]**

QUESTION 3: DOOR FRAME

Draw, to a scale 1:2, the horizontal section through a door opening with a 148 mm × 38 mm single-rebated timber jamb lining built into a half-brick wall plastered both sides.

SPECIFICATIONS:

- 110 mm wall (part of the wall)
- 148 mm × 38 mm jamb lining
- 19 mm plaster
- 100 mm × 22 mm architrave
- 75 mm × 22 mm skirting
- 110 mm × 32 mm rough grounds or backing
- Plugs built into wall
- Also show the dimension of the wall.

[16]

Copyright reserved

QUESTION 4: MASONRY

Make use of a neat, labelled drawing to show the construction of a squared rubble wall built to course.

The drawing must show the following:

- Coping
- Riser
- Leveller through
- Bonder

[10]

QUESTION 5: ROOF AND ROOF COVERING

FIGURE 2 below shows the side of a house with a fire place. The roof is covered with 420 mm × 250 mm Marseilles pattern tiles.

Draw, to scale 1:10, a vertical section of the area marked 'A' in FIGURE 2 below and show the following:

- Chimney stack
- Flue
- Parging
- Marseilles pattern tiles
- 45° Pitch
- 114 mm × 38 mm Rafters
- 38 mm × 38 mm battens at 340 mm centres
- Fillet
- Cover flashing
- Gutter
- Dimensions of chimney and flue

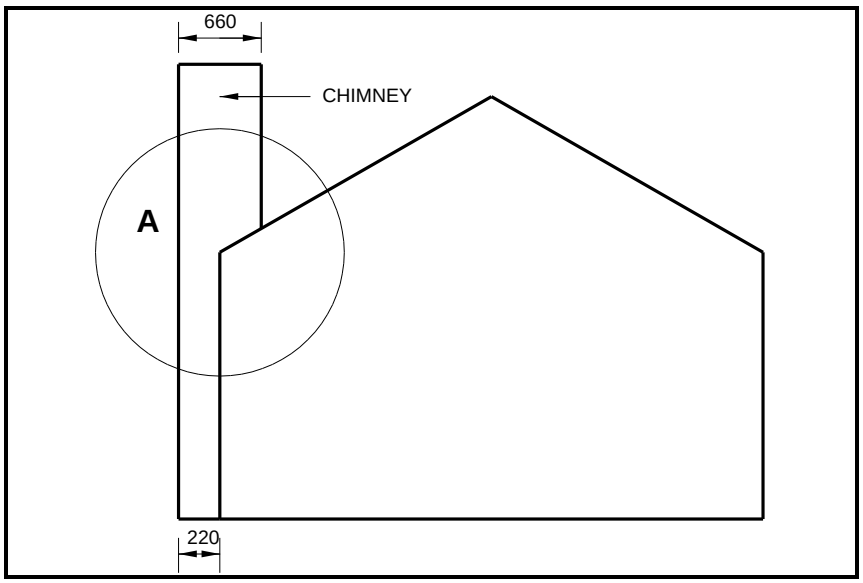

FIGURE 2

[18]

QUESTION 6: PLUMBING

Draw, to scale 1:5, a vertical section through a closed valley of a roof covered with slates.

The drawing must include the labelling and have the following:

- 114 mm × 38 mm Jack rafters
- 220 mm × 38 mm Valley rafter
- 38 mm × 38 mm Battens at 300 mm centres
- Slates
- Sheet lead
- Soakers
- Dimensions of the batten spacing

[15]

TOTAL: 100

Copyright reserved