higher education & training

Department:
Higher Education and Training
REPUBLIC OF SOUTH AFRICA

NATIONAL CERTIFICATE (VOCATIONAL)

MATHEMATICS
NQF LEVEL 4
(First paper)

(10501064)

5 November 2024 (X-paper)
09:00–12:00

Nonprogrammable scientific calculators may be used.

This question paper consists of 9 pages, 2 addenda and a formula sheet of 2 pages.

017Q1N2405

Copyright reserved

DEPARTMENT OF HIGHER EDUCATION AND TRAINING
REPUBLIC OF SOUTH AFRICA

NATIONAL CERTIFICATE (VOCATIONAL)
MATHEMATICS
NQF LEVEL 4
(First paper)
TIME: 3 HOURS
MARKS: 100

INSTRUCTIONS AND INFORMATION

1. Answer all the questions.
2. Read all the questions carefully.
3. Number the answers according to the numbering system used in this question paper.
4. Start each section on a new page.
5. Leave at least THREE lines open after each question.
6. Diagrams are not drawn to scale.
7. Round off answers to TWO decimal places unless stated otherwise.
8. Use only a black or blue pen.
9. Write neatly and legibly.

Copyright reserved

QUESTION 1

1.1 Various options are given as possible answers to the following questions. Choose the answer and write only the letter (A–D) next to the question number (1.1.1–1.1.5) in the ANSWER BOOK.

1.1.1 If $z_1 = 2 - 3i$ and $z_2 = -3 + 2i$, then $z_1.z_2 =$

A $13i.$
B $-1 - i.$
C $-12 + 5i.$
D $-6 - 6i.$

1.1.2 $3i^2 - i^5$ simplified will be …

A $6i - 5i^4.$
B $2i^{-3}.$
C $-3 - i.$
D $i^2(3 - i^3).$

1.1.3 $(x - 3i)(x + 3i)$ completely simplified is …

A $(x^2 - 3xi - 9i^2).$
B $(x^2 - 9).$
C $2x.$
D $(x^2 + 9).$

1.1.4 If the complex numbers $z_1 = 3\text{cis}30°$ and $z_2 = 30\text{cis}45°$, then $z_1 \times z_2 =$ …

A $30^3\text{cis}(30° \times 45°).$
B $90\text{cis}75°.$
C $33\text{cis}75°.$
D $90\text{cis}(30° \times 45°).$

1.1.5 If $16i^2 + xi = 32i - 16$, the value of x is …

A $32.$
B $24.$
C $32 + 31i.$
D $-16.$

(5 × 1) (5)

1.2 Given $z_1 = r_1\text{cis}\,\alpha°$ and $z_2 = r_2\text{cis}\,\beta°$.

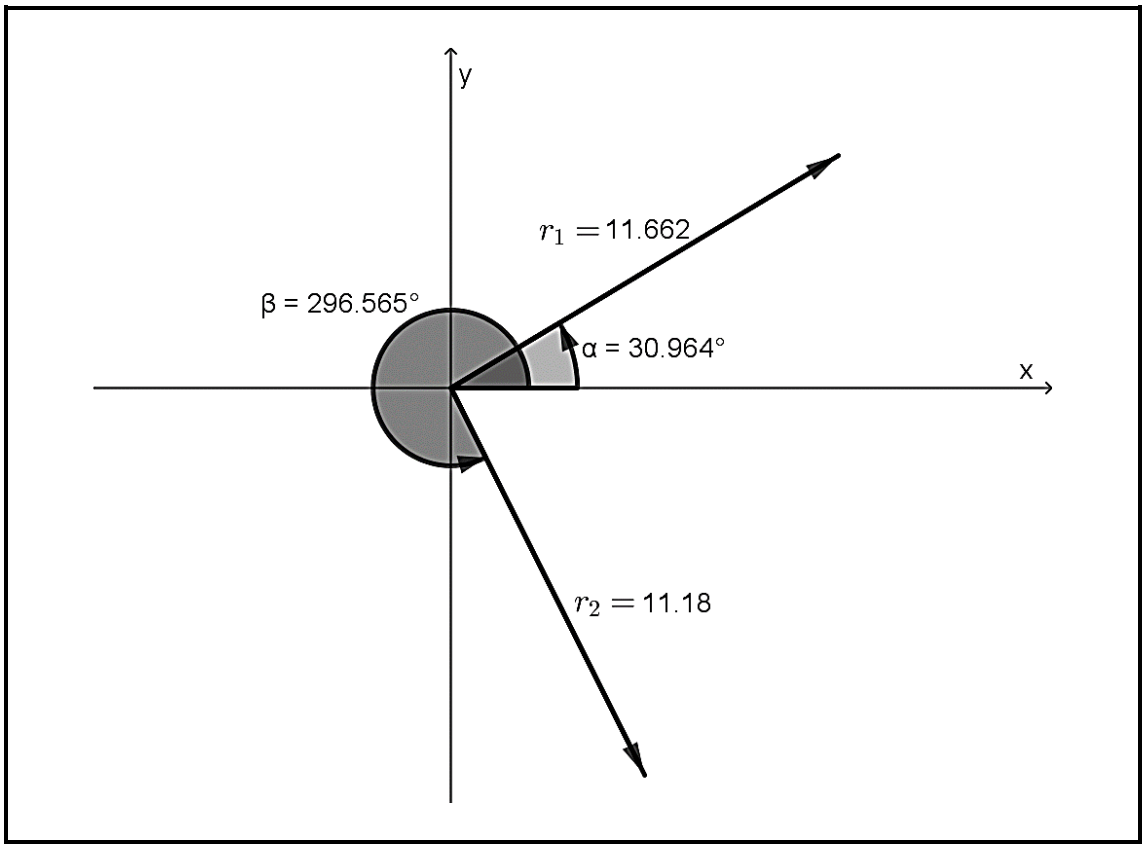

1.2.1 Write z_1 in the standard form. (1)

1.2.2 Determine $z_1 + z_2$. Leave the answer in polar form with a positive argument where $0 \leq \theta \leq 360$. (3)

1.2.3 Apply De Moivre's theorem to calculate $5 \times (z_1)^3$. Leave the answer in polar form with a positive argument where $0 \leq \theta \leq 360$. (2)

1.3 Given: $(a + bi)(3 - 4i) = -6 - 17i$

Solve $a + bi$. (3)

1.4 Given: $5x^2i - 4 = 3yi^4 + y^2i^2 - y(xi + i)$

Solve x and y where $y \in N$. (4)

[18]

QUESTION 2

2.1 Prove that $(x + 2)$ is a factor of $x^3 + 9x^2 + 26x + 24$. (1)

2.2 If $(x + 1)(x - 3)(x + c)$ is a factor of $x^3 - ax^2 + ax + b$, determine the values of *a*, *b* and *c*. (5)

2.3 $f(x) = 2x + 3$ where $\{x: -1 \leq x < 2; x \in \text{R}\}$ and $g(x): y = x^2$ with domain $x \in R$.

2.3.1 Determine the value of $g(\sqrt{3})$. (1)

2.3.2 Determine the equation of $f^{-1}(x)$ in the form *y* = … (1)

2.3.3 Determine the value of a if $g(a + 2) - f(a + 2) = 0$. (3)

2.3.4 Write down the domain for $f^{-1}(x)$. (2)

2.3.5 Prove that $f\left(f^{-1}(x)\right) = f^{-1}(f(x))$. (3)

2.3.6 Draw a neat graph of $f(x)$ and $f^{-1}(x)$ on the same system of axes on ADDENDUM A (attached), clearly showing the nature of the start and endpoints on the graphs. Also show the line about which $f(x)$ reflects $f^{-1}(x)$ and label it. (3)

[19]

QUESTION 3

3.1 Given the following equation: $f(x) = -\frac{2}{x}$

Determine the derivative of $f(x)$ by using first principles. Show all steps. (3)

3.2 Use differentiation rules to determine the derivatives of the following, leaving the answers with positive exponents and in surd form where applicable:

3.2.1 $y = 3\cos 5x + 2e^{4x} + 12x^3 + ln8$ (2)

3.2.2 $y = 2ln3x - \sqrt[3]{x^2} - \frac{2}{x^5} + \frac{5}{3x}$ (5)

3.2.3 $y = 3e^{4x}.\sin 3x$ (2)

[12]

QUESTION 4

4.1 Determine the following integrals and simplify the answers. Leave the answers with positive exponents and in surd form where applicable:

4.1.1 $\int (6\cos 3x + 10x^4 + \frac{6}{x} + 5x)\, dx$ (2)

4.1.2 $\int \left(-10e^{5x} + \frac{3}{2\sqrt{x}} - \frac{3}{2\sqrt[3]{x^5}} + \frac{2}{x^2}\right) dx$ (4)

4.1.3 $\int \left(\frac{4x^2 - 1}{2x - 1}\right) dx$ (2)

4.2 A particle moves so that $v = 2t + 3$ where *v* is velocity in metres per second and *t* time in seconds. Given: $s = \int v\, dt$ where *s* stands for distance in meters.

4.2.1 Find an expression for *s* (distance) in terms of *t* in the most general form. Apply integration to derive an answer. (2)

4.2.2 (a) Hence, determine the value of *c* (the constant value) from QUESTION 4.2.1 if given that *s* = 2 when *t* = 0. (1)

(b) Calculate the distance (*s*) at *t* = 5. (1)

4.3 Study the graph below and calculate the magnitude of the shaded area by using integration.

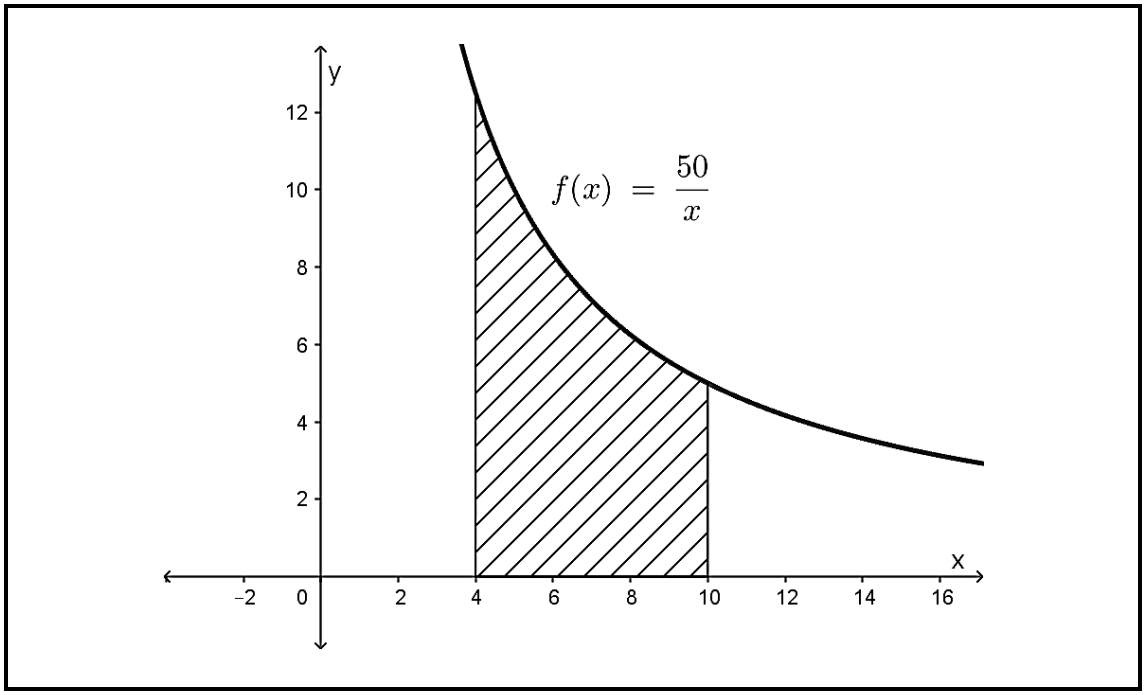

(3)

[15]

QUESTION 5

5.1 The distance *s*, in metres, of a car is given by $s = 10t^3 + 5t + 10$ where *t* is time in seconds.

5.1.1 Determine the distance travelled at *t* = 2 s. (1)

5.1.2 Determine the velocity of the car at *t* = 5 s. (2)

5.1.3 Determine the acceleration at *t* = 3 s. (1)

5.1.4 Determine the time it takes for the car to reach a velocity of 500 m/s. (2)

5.2 The following third-degree polynomial is given: $g(x) = x^3 - 7x^2 + 17x - 15$.

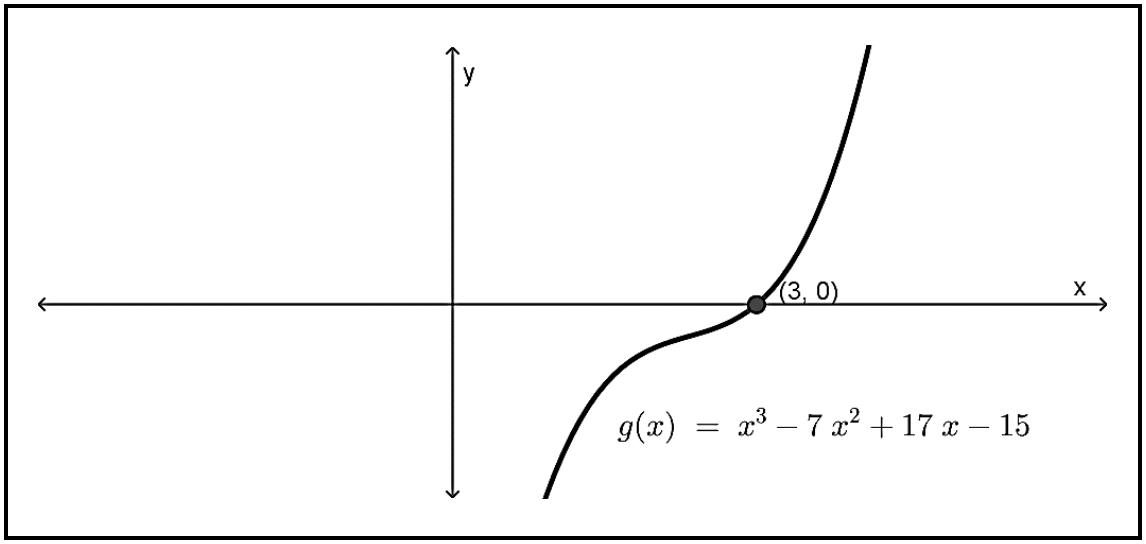

5.2.1 Write down a factor for *g*(*x*). (1)

5.2.2 Hence, determine all the roots for *g*(*x*). Write the nonreal roots in the form $a \pm bi$. (4)

5.2.3 Determine the point of inflection for *g*(*x*). (3)

5.2.4 Determine the gradient of *g*(*x*) at *x* = 2. (1)

5.3 Find the equation of the tangent to the curve *xy* = *k* at any point $P\left(a; \frac{k}{a}\right)$ on the curve. (3)

[18]

Copyright reserved

QUESTION 6

6.1 A sweet factory prepares packs with mixed sweets. They add three types of sweets, namely Power, Quanz and Roundy toffees. Roundy toffees are the cheapest and are used to fill the packs. They must add, at the most, twice as much Quanz as Power in the mixed packs. A maximum of 500 g Power and Quanz can be added to a pack. The amount of Roundy toffees per pack is given as $500 - (x + y)$. There must be less than 200 g of Roundy toffees per pack. Let Power be x, Quanz y and Roundy z. The cost respectively for Power, Quanz and Roundy is 20 cents, 30 cents and 10 cents per gram.

6.1.1 Two of the constraints are $x \geq 0$ and $y \geq 0$.

Model the other constraints in respect of the given information in terms of x and y. (3)

6.1.2 Use ADDENDUM B (attached) to answer the following questions:

(a) Represent the inequalities graphically. (3)

(b) Indicate the feasible region on the graph. (1)

(c) The cost equation is $c = 20x + 30y + 10(500 - (x + y))$. Use this equation to draw the search line. Locate and label the point that will give a maximum cost on the graph. Show the answer on ADDENDUM B (attached). (2)

(d) Calculate the coordinates of the maximum point analytically. (2)

(e) Hence, calculate the minimum price they should sell this pack of sweets, determined in QUESTION 6.1.2 (d), for if they want to make R20 profit per pack. Give the answer in Rand. (2)

Copyright reserved

6.2 A large car park has an area of 1 400 m^2 with space for x cars and y trucks. Each car requires 14 m^2 of space and each truck requires 35 m^2 of space. There must also be space for:

(i) at least 50 vehicles
(ii) at least 20 trucks

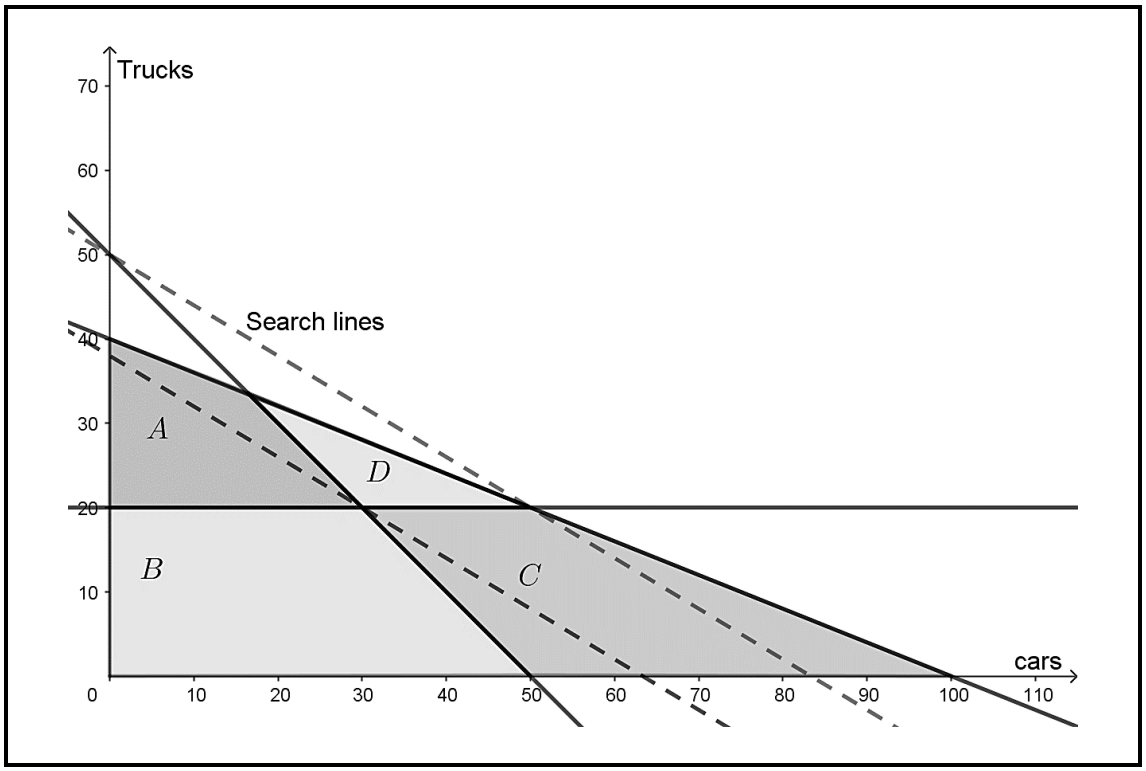

6.2.1 Two of the constraints are $x \geq 0$ and $y \geq 20$.

Model the other constraints in respect of the given information in terms of x and y. (2)

6.2.2 Which of the polygons on the graph (A, B, C or D) will represent the feasible region? (1)

6.2.3 Is 62 cars and 24 trucks a feasible number of vehicles to be parked in the car park? Substantiate the answer. (2)

[18]

TOTAL: 100

Copyright reserved

ADDENDUM A **EXAMINATION NUMBER:**

CENTRE NUMBER:

2.3.6

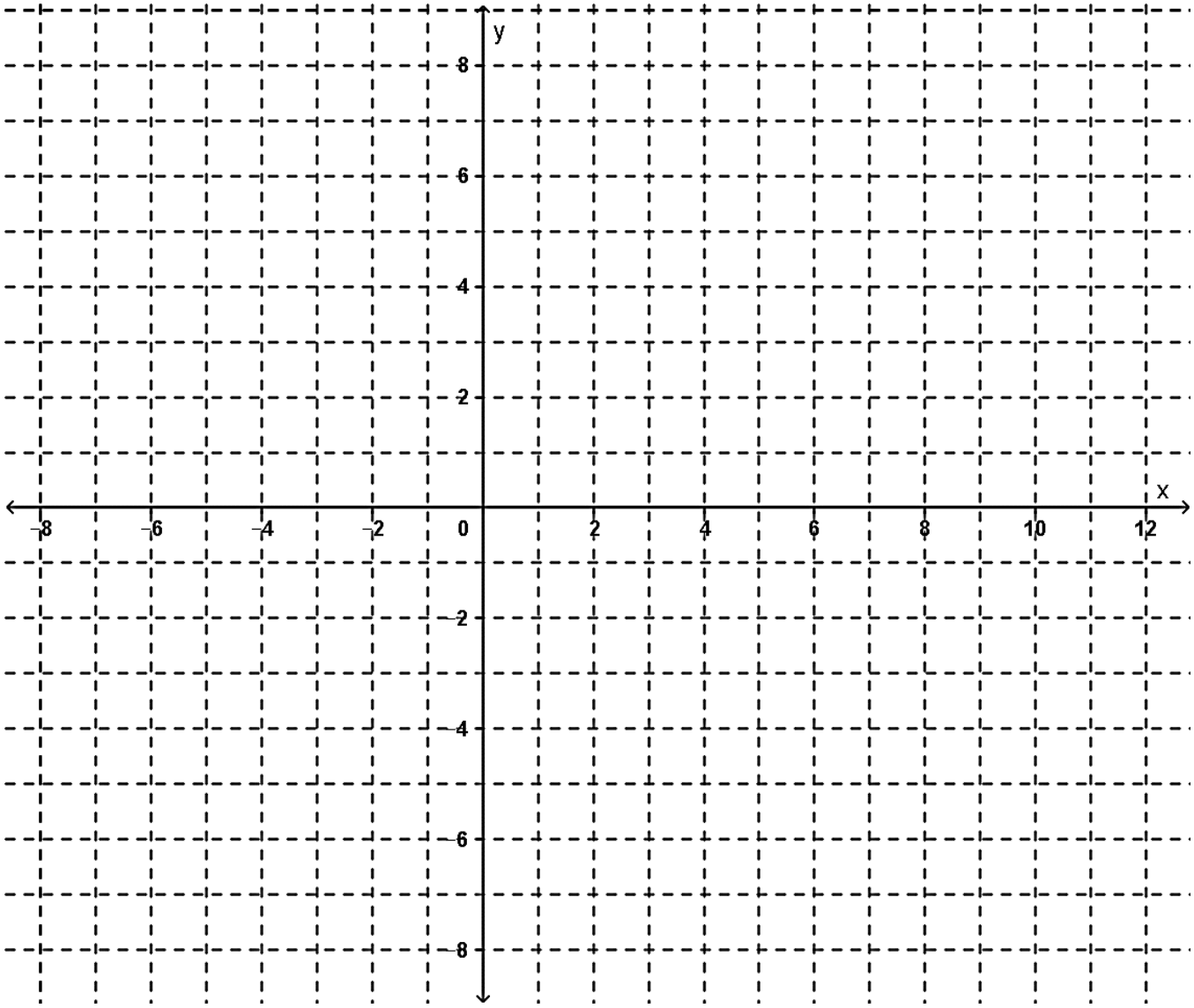

Copyright reserved

ADDENDUM B **EXAMINATION NUMBER:**

CENTRE NUMBER:

6.1.2

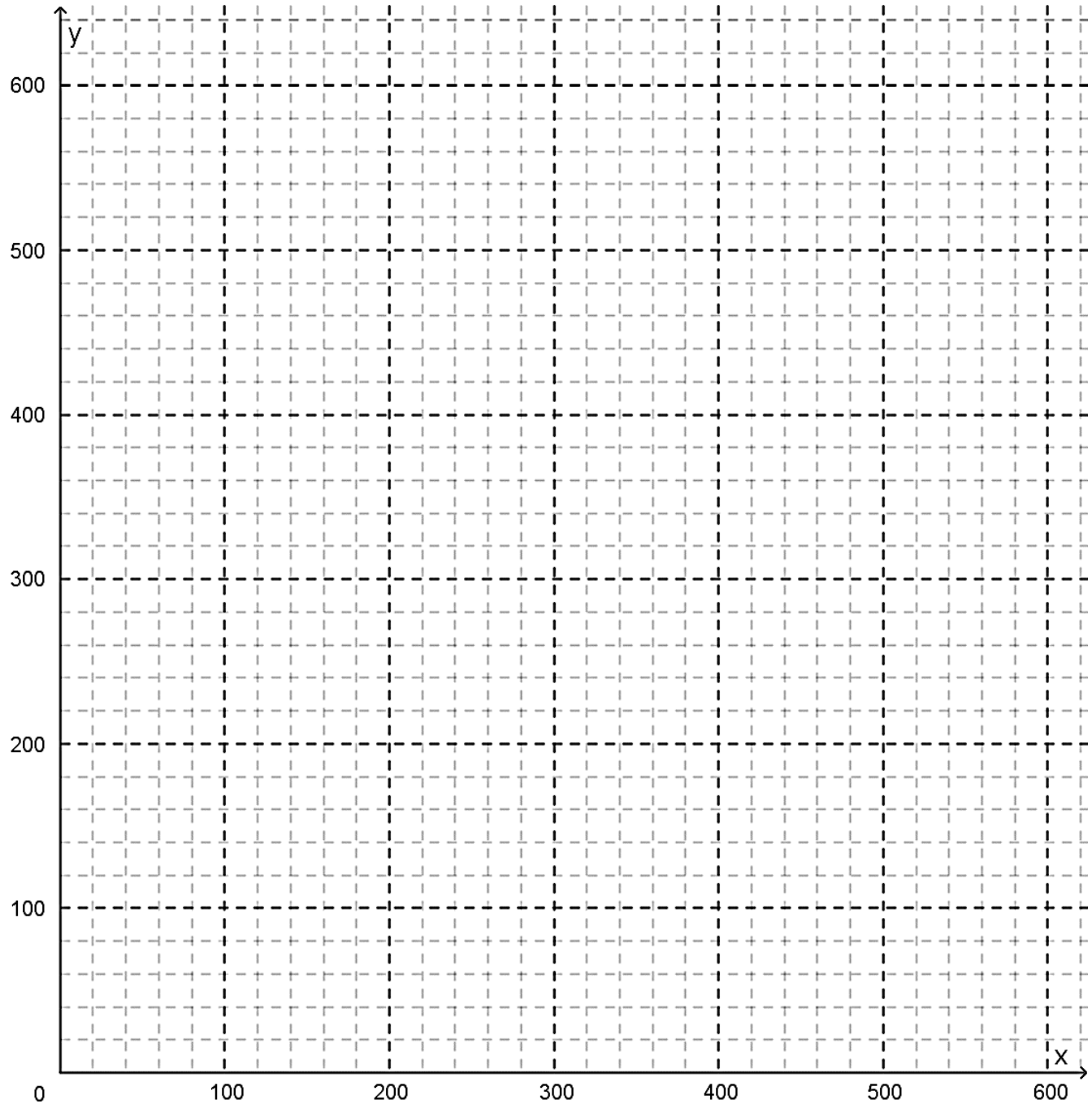

Copyright reserved

FORMULA SHEET

1. $z = r\cos\theta \pm rj\sin\theta$ **or** $z = r\cos\theta \pm ri\sin\theta$
2. $z = a \pm bj$ **or** $z = a \pm bi$ where $i = j = \sqrt{-1}$
3. $r\angle\theta = rcis\theta$ where r represents the modulus and θ represents the argument
4. $m = \lim_{h\to 0}\dfrac{f(x+h)-f(x)}{h}$
5. $\dfrac{d}{dx}x^n = nx^{n-1}$
6. $\dfrac{d}{dx}k = 0$
7. $\dfrac{dy}{dx} = u.\dfrac{dv}{dx} + v.\dfrac{du}{dx}$ **or** $\dfrac{d}{dx}[f(x).g(x)] = f(x)g'(x) + f'(x)g(x)$
8. $\dfrac{dy}{dx} = \dfrac{v.\frac{du}{dx} - u.\frac{dv}{dx}}{v^2}$ **or** $\dfrac{d}{dx}\left[\dfrac{f(x)}{g(x)}\right] = \dfrac{f'(x)g(x) - f(x)g'(x)}{[g(x)]^2}$
9. $\dfrac{dy}{dx} = \dfrac{dy}{du}\times\dfrac{du}{dx}$
10. If $y = \big(f(x)\big)^n$ then $\dfrac{dy}{dx} = n\big(f(x)\big)^{n-1}f'(x)$
11. If $y = ln\,kx$ then $\dfrac{dy}{dx} = \dfrac{k}{kx}$ **or** If $f(x) = \ln kx$ then $f'(x) = \dfrac{k}{kx}$
12. If $y = e^x$ then $\dfrac{dy}{dx} = e^x$ **or** If $f(x) = e^x$ then $f'(x) = e^x$
13. If $y = e^{kx}$ then $\dfrac{dy}{dx} = ke^{kx}$ **or** If $f(x) = e^{kx}$ then $f'(x) = ke^{kx}$
14. If $y = \sin x$ then $\dfrac{dy}{dx} = \cos x$ **or** If $f(x) = \sin x$ then $f'(x) = \cos x$
15. If $y = \cos x$ then $\dfrac{dy}{dx} = -\sin x$ **or** If $f(x) = \cos x$ then $f'(x) = -\sin x$
16. If $y = \tan x$ then $\dfrac{dy}{dx} = \sec^2 x$ **or** If $f(x) = \tan x$ then $f'(x) = \sec^2 x$
17. If $y = \cot x$ then $\dfrac{dy}{dx} = -\text{cosec}^2 x$ **or** If $f(x) = \cot x$ then $f'(x) = -\text{cosec}^2 x$
18. If $y = \sec x$ then $\dfrac{dy}{dx} = \sec x\tan x$ **or** If $f(x) = \sec x$ then $f'(x) = \sec x\tan x$
19. If $y = \text{cosec}\,x$ $\rightarrow \dfrac{dy}{dx} = -\text{cosec}\,x\cot x$ **or** If $f(x) = \text{cosec}\,x$ $\rightarrow f'(x) = -\text{cosec}\,x\cot x$

Copyright reserved

20. $\int x^n dx = \frac{x^{n+1}}{n+1} + c$

21. $\int kx^n dx = k\int x^n dx$ where k is a constant value

22. $\int [f(x) \pm g(x)]dx = \int f(x)dx \pm \int g(x)dx$

23. $\int \frac{k}{x} dx = k \ln x + c$

24 $\int e^{kx} dx = \frac{e^{kx}}{k} + c$

25. $\int \sin kx \, dx = -\frac{\cos kx}{k} + c = -\frac{1}{k}\cos kx + c$

26. $\int \cos kx \, dx = \frac{\sin kx}{k} + c = \frac{1}{k}\sin kx + c$

27. $\int \sec^2 kx \, dx = \frac{\tan kx}{k} + c = \frac{1}{k}\tan kx + c$

28. $A = \int_a^b y \, dx$

29. $[f(x)]_a^b = f(b) - f(a)$

Copyright reserved