higher education & training

Department:
Higher Education and Training
REPUBLIC OF SOUTH AFRICA

NATIONAL CERTIFICATE (VOCATIONAL)

MATHEMATICAL LITERACY

(First paper)

NQF LEVEL 4

(10401034)

5 November 2024 (X-paper)
09:00–12:00

Non-programmable calculators may be used.

This question paper consists of 10 pages and 1 answer sheet.

013Q1N2405

Copyright reserved

DEPARTMENT OF HIGHER EDUCATION AND TRAINING
REPUBLIC OF SOUTH AFRICA

NATIONAL CERTIFICATE (VOCATIONAL)
MATHEMATICAL LITERACY
NQF LEVEL 4
(First paper)
TIME: 3 HOURS
MARKS: 150

INSTRUCTIONS AND INFORMATION

1. Answer all the questions.
2. Read all the questions carefully.
3. Number the answers according to the numbering system used in this question paper.
4. Show all the calculations clearly.
5. Round off the answers correctly according to the given context. In all cases where the context is not specific, round off the answers to two decimal places.
6. Indicate units of measurement where applicable.
7. Diagrams are not necessarily drawn to scale.
8. Answer QUESTION 3.2 and QUESTION 4.1.5 on the attached ANSWER SHEET. Write your EXAMINATION NUMBER and CENTRE NUMBER on the ANSWER SHEET, detach it from the question paper and hand it in with the ANSWER BOOK.
9. Use only a black or blue pen.
10. A pencil may be used to draw the graph.
11. Write neatly and legibly.

Copyright reserved

QUESTION 1

1.1 Rearrange the following in ascending order:

$$45{,}2\%\,;\,0{,}463;\,\frac{22}{50};\,\frac{4}{10}$$ (2)

1.2 Convert 1,5 kg to grams. (2)

1.3 The price of a 1,5 kg tin of coffee is R219,95. What is the cost per gram? (2)

1.4 Calculate the following without using a calculator. Show ALL the workings.

1.4.1 $[72 - 12 \div 3 - 2] + (18 - 6) \div 4$

HINT: BODMAS (3)

1.4.2 $$2^3 + \frac{3}{\sqrt[3]{5^2 + 2}}$$ (4)

1.5 Cobar Mining company shares decreased by 7% from the previous week's price of R12,80 each. Find this week's price. (3)

1.6 Write 3 p.m. in 24-hour notation. (2)

1.7 The table below represents the different GMT time zones for each city.

CITY	GMT TIME ZONE
Toronto (Canada)	-6
Paris (France)	+2

The time is 16:00 in Toronto. What will the time be in Paris? (3)

1.8 The temperature is 24 ℃ in Paris. What will the temperature be if converted to °F?

You may use the formula: $°F = (℃ \times 1{,}8) + 32^{\circ}$ (2)

1.9 Bushy and her daughter, Palesa, have won R10 000 in a competition. The cost to enter the competition was R8. Bushy paid R5 and Palesa paid R3. Calculate the amount each one received of the R10 000 if it was split according to their individual contribution. (4)

1.10 The maximum speed limit on a national road in South Africa is 120 km/h. Aphiwe exceeded this speed limit by 3%. Determine the amount, in km/h, he exceeded the speed limit by. (3)

[30]

Copyright reserved

QUESTION 2

2.1 The height of the Aon Center Building in Chicago casts a shadow of 43 metres long as shown in the diagram below. Refer to the diagram below to answer the questions that follow.

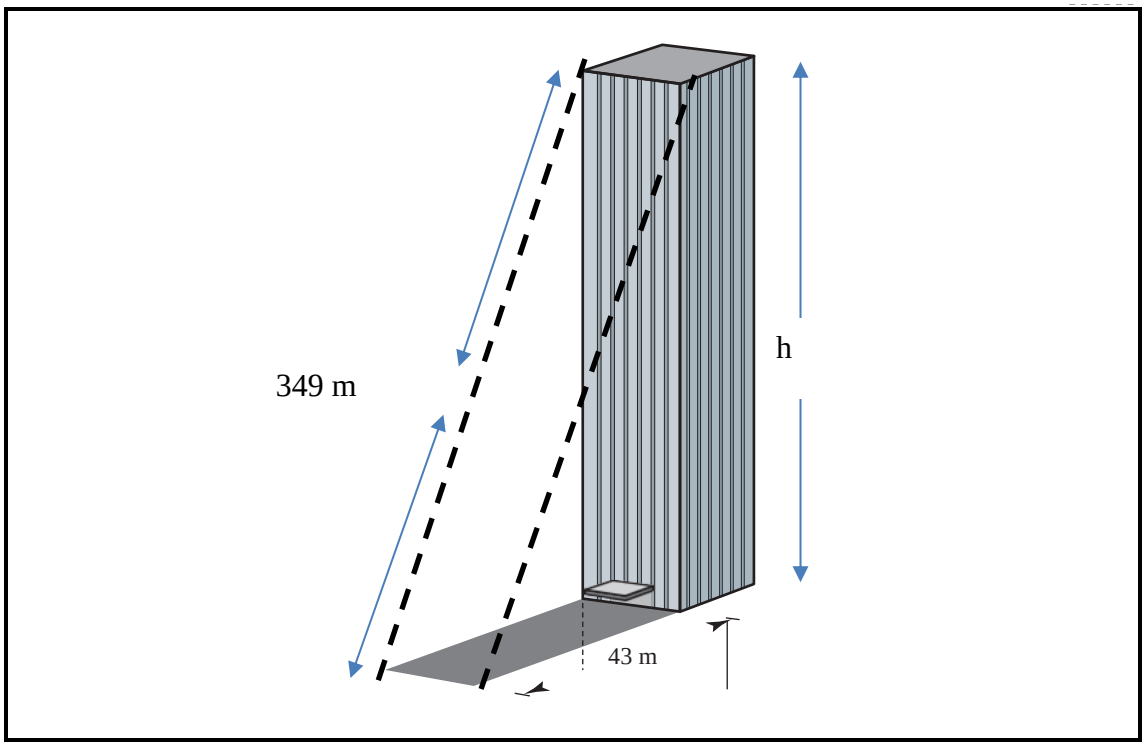

[Adapted Source: *width of the Aon Building in Chicago - Search (bing.com)*]

2.1.1 Determine the perimeter of the shadow of the building if its width is 59 m.

HINT: Perimeter (P) = $2(l + b/w)$ (3)

2.1.2 Calculate the area of the shadow of the building if its width is 59 m.

HINT: Area (A) = $l \times b / w$ (3)

2.1.3 Use the theorem of Pythagoras to determine the height of the building (h).

HINT: $hypotenuse^2 = side^2 + side^2$ (4)

2.2 A cylindrical can has a volume of 600 cm^3 and a diameter of 8 cm. Refer to the picture below and answer the questions that follow.

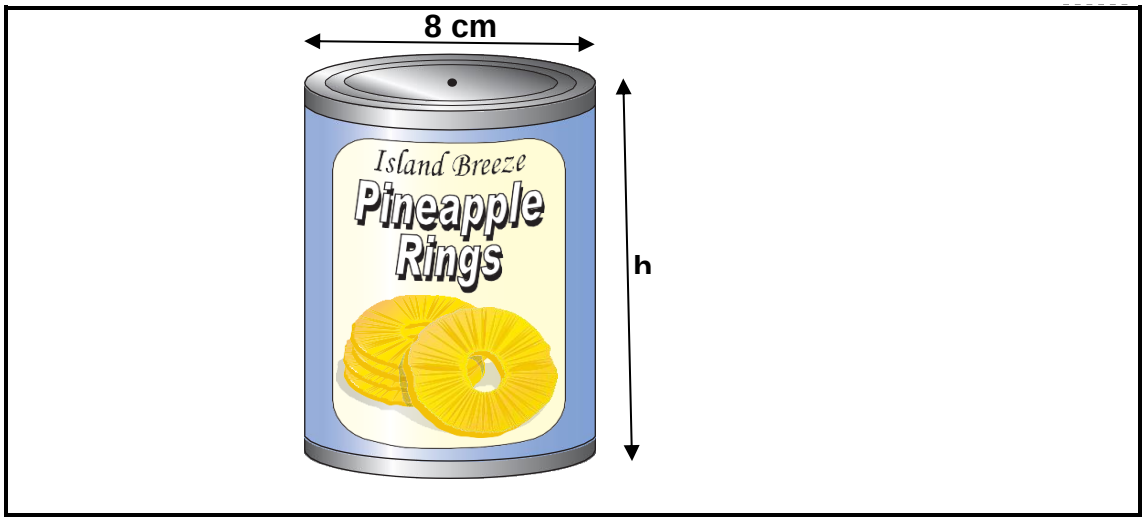

[Source: *https://images.app.goo.gl/S37uGsFqmumLbRe96*]

2.2.1 Determine the radius of the cylindrical can. (2)

2.2.2 Hence, calculate the circumference of the top of the can.

HINT: $\text{Circumference(C)} = 2\pi r$, use $\pi = 3{,}14$ (2)

2.2.3 By means of a calculation, show that the height of the can is 11,94 cm.

HINT: Volume (V) $= \pi r^2 h$, use $\pi = 3{,}14$ (4)

2.2.4 Calculate the total surface area of the can.

HINT: $Total\ Surface\ Area$ (SA) $= 2\pi r h + 2\pi r^2$, use $\pi = 3{,}14$ (3)

2.3 A shop is packing cylindrical tins of varnish into rectangular boxes for delivery. The cylindrical tins have a diameter of 7,5 cm and a height of 10 cm each. Each rectangular box is 60 cm long, 45 cm wide and 30 cm high.

Calculate the number of cylindrical tins that can be packed, in an upright position, into each rectangular box.

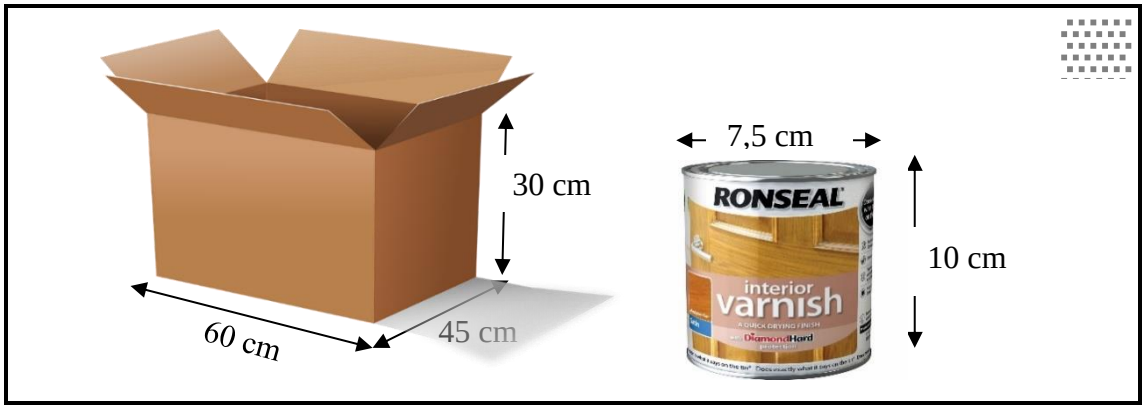

[Source: *https://images.app.goo.gl/S37uGsFqmumLbRe96*] (6)

2.4 A length of 12 mm is measured on a map. The actual distance is known to be 300 m. Determine the scale of this map in the form: 1: _____ . (3)

[30]

QUESTION 3

3.1 The cost to produce one compact disc is R4 plus a one-time fixed cost of R2 000. The revenue (income) received from selling one compact disc is R12. Use the Total Income and Total Costs graph below to answer the questions that follow.

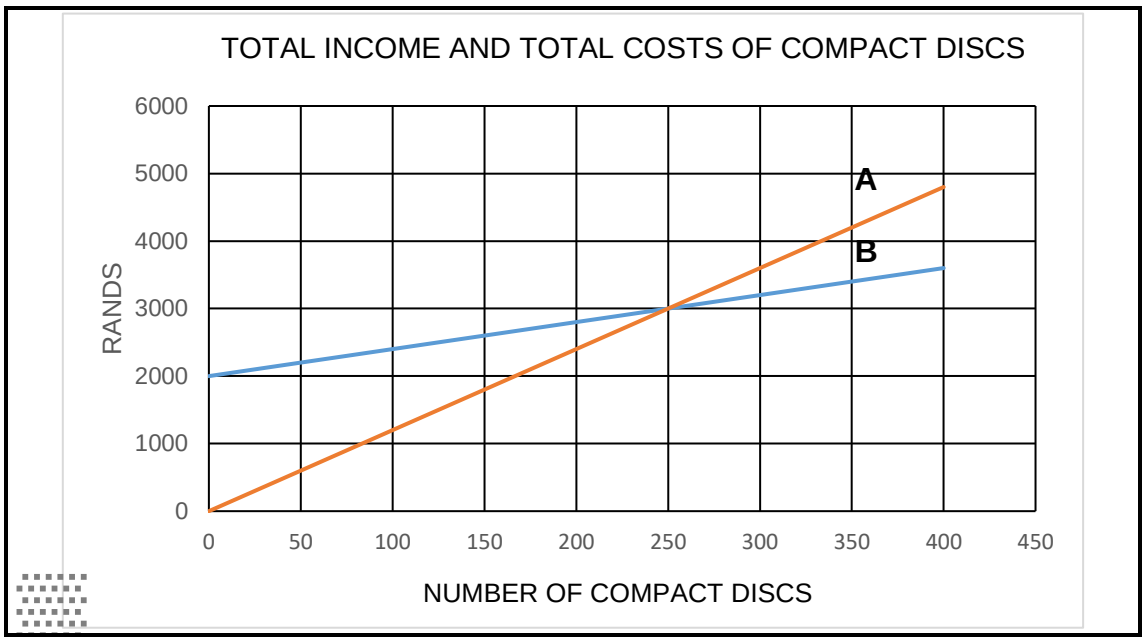

3.1.1 Write down the co-ordinates of the break-even point. (2)

3.1.2 What is the minimum number of compact discs that should be sold to yield a positive profit? (2)

3.1.3 What will happen if less than 250 compact discs are sold? (1)

3.1.4 Which graph represents the total income? Write down the correct label. (2)

3.1.5 Which graph represents the total cost? Write down the correct label. (2)

3.1.6 Estimate the total income of 400 compact discs. (2)

3.1.7 Estimate the total cost of 400 compact discs. (2)

3.1.8 Calculate the estimated total profit if 400 compact discs are sold. (2)

3.1.9 Determine the total cost if no compact discs are sold. (2)

3.1.10 Determine the total income if no compact discs are sold. (2)

Copyright reserved

3.2 The table below shows the option of a simple interest savings account, and a compound interest savings account offered by a bank.
The bank offers a 15% interest per annum on these savings accounts as shown in the table below.

Use this information to complete the table on the ANSWER SHEET.

SIMPLE AND COMPOUND INTEREST (IN RAND)

	SIMPLE INTEREST SAVINGS ACCOUNT		COMPOUND INTEREST SAVINGS ACCOUNT	
	INTEREST EARNED AND PAID OUT TO CLIENT	BALANCE	INTEREST EARNED	BALANCE
DEPOSIT		*(b)*		R5 000
AFTER 1 YEAR	*(a)*	R5 000	R750	R5 750
AFTER 2 YEARS	R750	R5 000	*(c)*	R6 612,50
AFTER 3 YEARS	R750	R5 000	R991,88	*(d)*

(4)

3.3 The table below shows the different monthly repayments of various personal loan amounts from a bank.

LOAN AMOUNT	MONTHLY REPAYMENT OVER 12 MONTHS	MONTHLY REPAYMENT OVER 24 MONTHS	MONTHLY REPAYMENT OVER 36 MONTHS
R1 000	R101,85	R55,90	R40,80
R1 500	R152,80	R83,90	R61,30
R2 000	R203,75	R111,90	R81,70

3.3.1 What will the monthly repayment be if you borrow R2 000 and the repayment period is 36 months? (1)

3.3.2 How much interest will you pay for a loan of R2 000 if the repayment period is 36 months? (3)

3.3.3 Redica takes a loan of R1 500 and pays it back over 24 months.

Calculate the total amount paid back. (3)

[30]

Copyright reserved

QUESTION 4

4.1 Raymond subscribes to a limited data plan from Vodacell. The limited data plans cost R120 for 1 gigabyte (GB) per month, R135 for 2 gigabytes per month and R150 for 3 gigabytes per month respectively.

Use the given information to answer the questions that follow.

4.1.1 Use the above information to set up a pattern for the costs of the data plans. Copy and complete the table below in your ANSWER BOOK.

Number of Gigabytes			
Cost per month (R)			

(3)

4.1.2 Derive a formula to determine the costs of the data plans. (3)

4.1.3 Determine the cost of 5 gigabytes. (2)

4.1.4 If the cost of an unlimited data plan is R195 per month, determine the amount of data Raymond should use to make it more profitable to sign up for the unlimited plan. (2)

4.1.5 Draw the following line graphs on the same system of axes on the ANSWER SHEET.
The limited data plan from 1 gigabyte to 7 gigabytes versus the unlimited data plan per month.
Give the line graphs a suitable heading and label the horizontal and vertical axes. Indicate what each line represents. (6)

4.1.6 Is the relationship between the cost per month and the number of gigabytes for each line graph decreasing, increasing or constant?

Give a reason for each answer. (4)

4.1.7 Which amount paid per month yields the same number of gigabytes for both plans? (2)

Copyright reserved

4.2 Zandile wants to paint her apartment. A building contractor advises her that it would take one painter at least 48 hours to complete the painting of the entire apartment. The table below represents the number of painters and the number of hours to complete the painting (painters work at the same pace). Refer to the table and answer the questions that follow.

Number of painters	1	2	3	**B**
Number of hours to complete painting	48	24	**A**	8

4.2.1 Name the dependent variable. (2)

4.2.2 Find the value of A. (2)

4.2.3 Find the value of B. (2)

4.2.4 What kind of relationship is represented in the table. (2)

[30]

QUESTION 5

5.1 The table below indicates the scores of the Bokke (South African) and All Blacks (New Zealand) rugby teams during the 2023 World Cup.

Use the information in the table to answer the questions that follow.

BOKKE AND ALL BLACKS 2023 WORLD CUP SCORES

TYPE OF GAME	BOKKE SCORE	ALL BLACKS SCORE
Group Stage 1	18	13
Group Stage 2	76	71
Group Stage 3	8	96
Group Stage 4	49	73
Quarter Final	29	28
Semi-Final	16	44
Grand Final	12	11

5.1.1 Calculate the mean score of the Bokke. (3)

5.1.2 Determine the median score of the All Blacks. (2)

5.1.3 The range in the scores of the All Blacks is 85. Find the difference in the range of the scores of the All Blacks and the Bokke. (3)

Copyright reserved

5.2 Use the following stacked bar graph to answer the questions that follow.

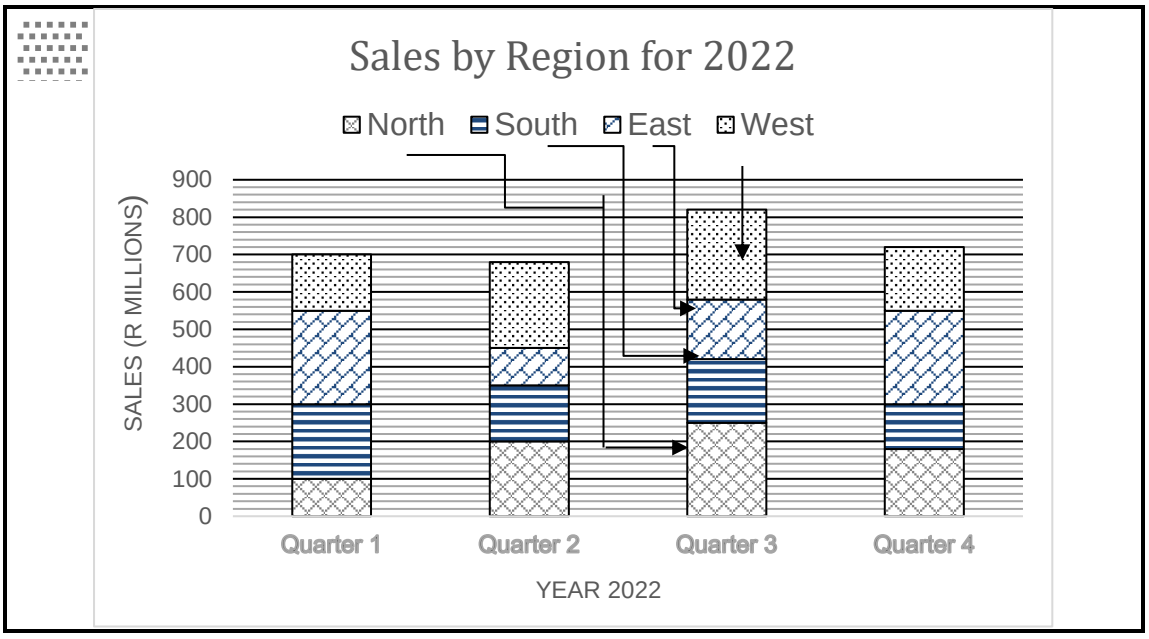

5.2.1 Determine the total amount of sales during the first quarter. (1)

5.2.2 Determine the amount of sales in the Northern region for the third quarter. (1)

5.2.3 Determine the amount of sales in the Eastern region for the third quarter. (2)

5.2.4 Calculate the total amount of sales for 2022. (5)

5.2.5 Which region had the biggest decrease in sales from the first to the second quarter? State this decreased amount. (2)

5.2.6 Which region(s) were the most stable in sales over the year? (2)

5.2.7 Calculate the percentage increase in the total amount of sales from the second to the third quarter. (3)

5.3 Two dice are thrown simultaneously. Find the probability of:

5.3.1 Getting six as a product. (2)

5.3.2 Getting the sum of less or equal to 3 (i.e. sum ≤ 3) (2)

5.4 200 families participated in a survey. The table below reflects the results of the survey. It indicates how many families have either 2, 1 or 0 girls.

Girls in the family	2	1	0
Number of families	32	154	14

One family is chosen at random. What is the probability that this family has ONE girl? (2)

[30]

TOTAL: 150

Copyright reserved

ANSWER SHEET

EXAMINATION NUMBER: | | | | | | | | | | | | | |

CENTRE NUMBER: | | | | | | | | | | |

QUESTION 3.2

	SIMPLE INTEREST ACCOUNT		COMPOUND INTEREST ACCOUNT	
	INTEREST EARNED AND PAID OUT TO CLIENT	BALANCE	INTEREST EARNED	BALANCE
DEPOSIT		***(b)***		**R5 000**
AFTER 1 YEAR	***(a)***	R5 000	R750	R5 750
AFTER 2 YEARS	R750	R5 000	***(c)***	R6 612,50
AFTER 3 YEARS	R750	R5 000	R991,88	***(d)***

(4 × 1) (4)

QUESTION 4.1.5

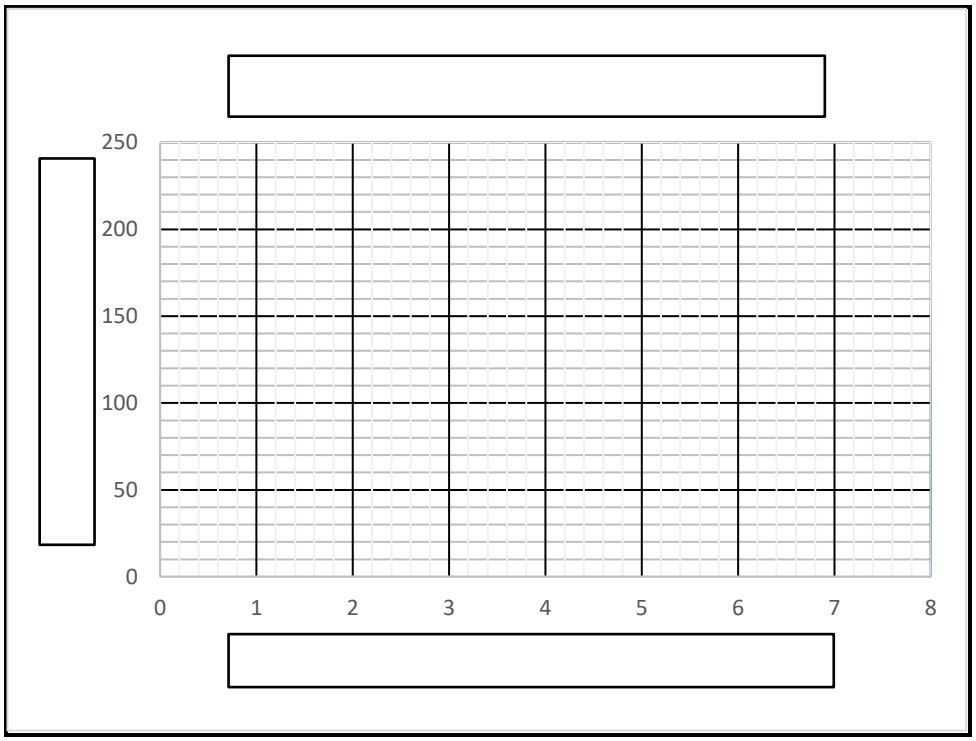

(6)

Copyright reserved