higher education & training

Department:
Higher Education and Training
REPUBLIC OF SOUTH AFRICA

NATIONAL CERTIFICATE

MECHANICAL DRAUGHTING N4

(8090204)

18 November 2024 (X-paper)
09:00–13:00

CLOSED-BOOK EXAMINATION

REQUIREMENTS: ONE A2 drawing sheet (instrumental drawing)

Drawing instruments and non-programmable calculators may be used

This question paper consists of 5 pages and 3 diagram sheets.

007Q1E2418

Copyright reserved

DEPARTMENT OF HIGHER EDUCATION AND TRAINING
REPUBLIC OF SOUTH AFRICA

NATIONAL CERTIFICATE
MECHANICAL DRAUGHTING N4
TIME: 4 HOURS
MARKS: 100

INSTRUCTIONS AND INFORMATION

1. Answer all the questions.
2. Read all the questions carefully.
3. Number the answers according to the numbering system used in this question paper.
4. Use both sides of the DRAWING SHEET.
5. Print the candidate information in the title block in ink.
6. Do all drawings in pencil.
7. Use your discretion for dimensions not given.
8. Use a 3 mm fillet radius for all radii not given.
9. All drawings must conform to the latest SANS 10111 Code of practice for Engineering Drawing.
10. Work neatly.

Copyright reserved

QUESTION 1: HELICAL SPRINGS

A right-hand helical spring is manufactured from a square steel material. Draw to scale 1:1, the helical spring in a vertical position with the sectional portion at the top left-hand side of the completed drawing. Draw two full turns true helical curves of a helical spring with the following details:

Outside diameter: 150 mm

Material size: 20 mm

Spring length: 140 mm

Lead division: 5 mm

[12]

QUESTION 2: CAM PROFILE

A cam is to give the following motion to a knife-edged follower:

During the first 90º of the cam rotation it rises; dwells for the next 60º of the cam rotation; returns stroke during the next 60º of the cam rotation; and dwells for the remaining 150º of the cam rotation. The stroke height of the follower is 40 mm, and the minimum diameter of the cam is 48 mm. The follower moves with simple harmonic motion during the outstroke and constant velocity during the return stroke.

Draw the cam's profile when the follower's axis is offset by 15 mm from the axis of the camshaft.

Show the displacement diagram and all construction lines. The displacement diagram must be drawn on the left-hand side of the cam profile. Do not draw the follower.

[15]

QUESTION 3: SECTIONAL DRAWING

FIGURE 1, DIAGRAM SHEET 1 (attached), shows TWO views of a machine casting.

Draw to scale 1:1, and in third-angle orthographic projection, the following views:

3.1 Copy the given top view (3)

3.2 A full-sectional front view on cutting plane X – X. (7)

3.3 A full-sectional right view on cutting plane Y – Y. (6)

Copyright reserved

3.4 Insert the following symbols and dimensions on the drawing:

3.4.1 At A: Indicate that the hole with a diameter of 22 mm has an upper deviation of 15 micrometres and a lower deviation of 0 micrometre.

3.4.2 At B: Indicate a distance 30 mm with an upper deviation of 10 micrometres and a lower deviation of 15 micrometres.

(2 × 2) (4)
[20]

QUESTION 4: DETAIL DRAWING

FIGURE 2, DIAGRAM SHEET 2 (attached), shows a full-sectional front view of a gear drive assembly consisting of the following parts:

- Item 1 – Body
- Item 2 – Base plate
- Item 3 – Gear
- Item 4 – Bush
- Item 5 − Bolt
- Item 6 – Nut
- Item 7 – Key
- Item 8 – M10 Hexagonal nut

Draw, to scale 1:1, detail drawings of the following components in third-angle orthographic projection:

4.1 A half-sectional front view of the body (Item 1) with the bottom half in section, show hidden detail in the half not in section. (7)

4.2 The base plate (Item 2) showing the following views:

4.2.1 A full-sectional front view (8)

4.2.2 The right view showing all hidden details (5)
[20]

QUESTION 5: ASSEMBLY DRAWING

FIGURE 3, DIAGRAM SHEET 3 (attached), shows the components of the slide door guide. The complete parts list is as follows:

ITEM	DESCRIPTION	QTY
1	BODY	1
2	PULLEY	1
3	BOLT	1
4	PIN	1

5.1 Draw, to scale 1:1 and in first-angle orthographic projection, the following view of the assembled parts:

5.1.1 A full-sectional front view. (20)

5.1.2 Print the title and scale beneath the layout. (2)

5.1.3 Insert all item numbers. (4)

5.1.4 Insert a parts list. (4)
[30]

Balanced layout and neatness of the complete answer sheet. **[3]**

TOTAL: **100**

Copyright reserved

DIAGRAM SHEET 1

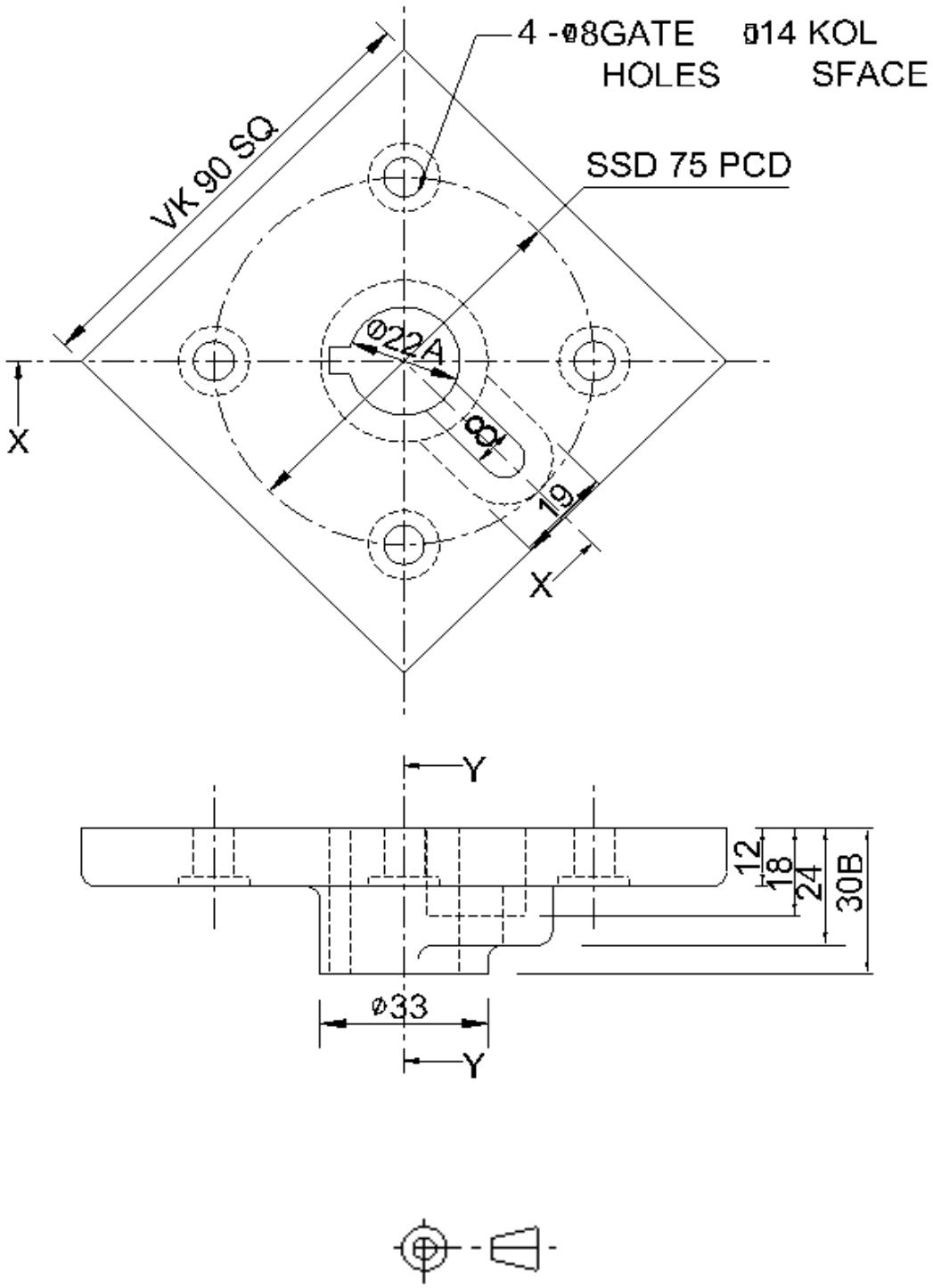

FIGURE 1

Copyright reserved

DIAGRAM SHEET 2

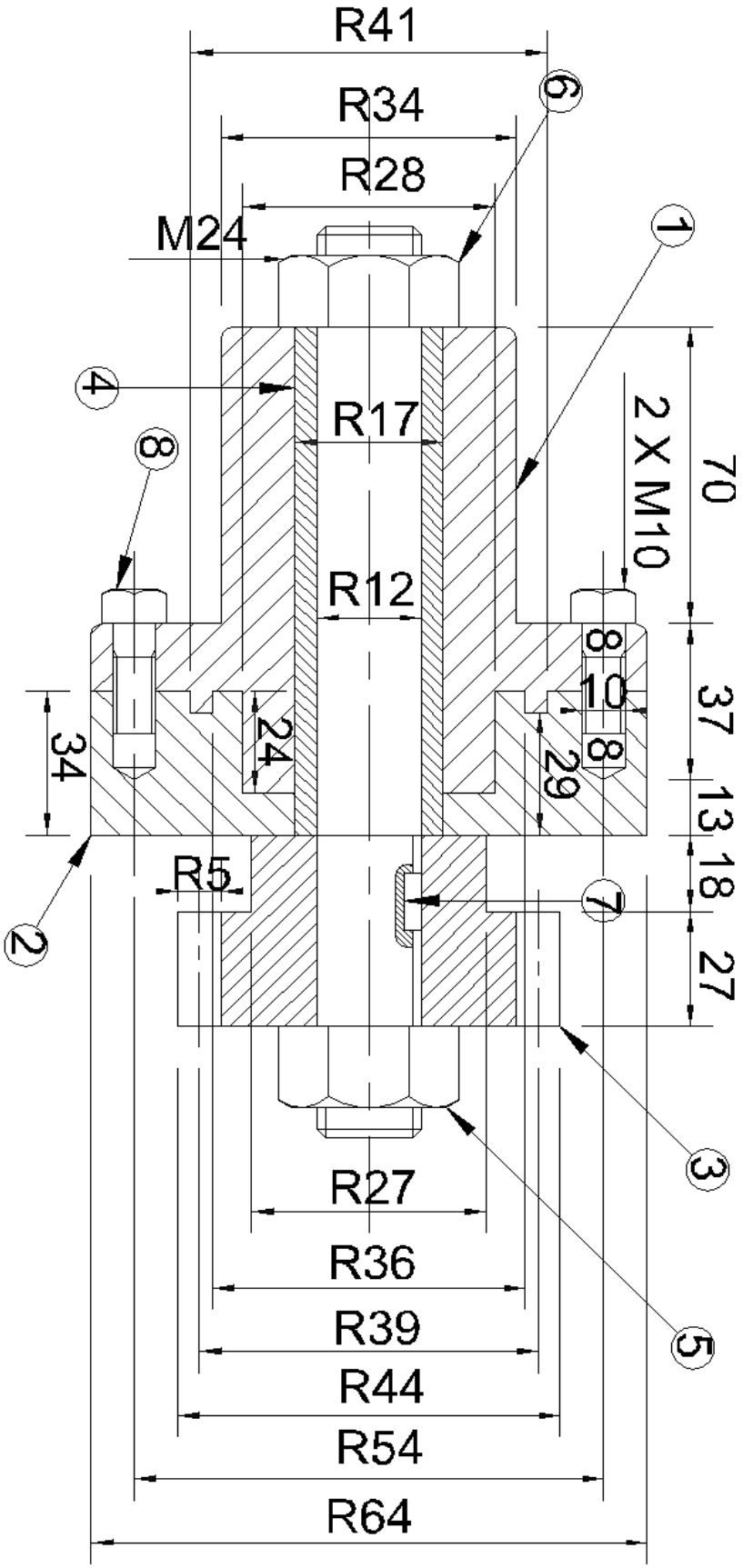

FIGURE 2

Copyright reserved

DIAGRAM SHEET 3

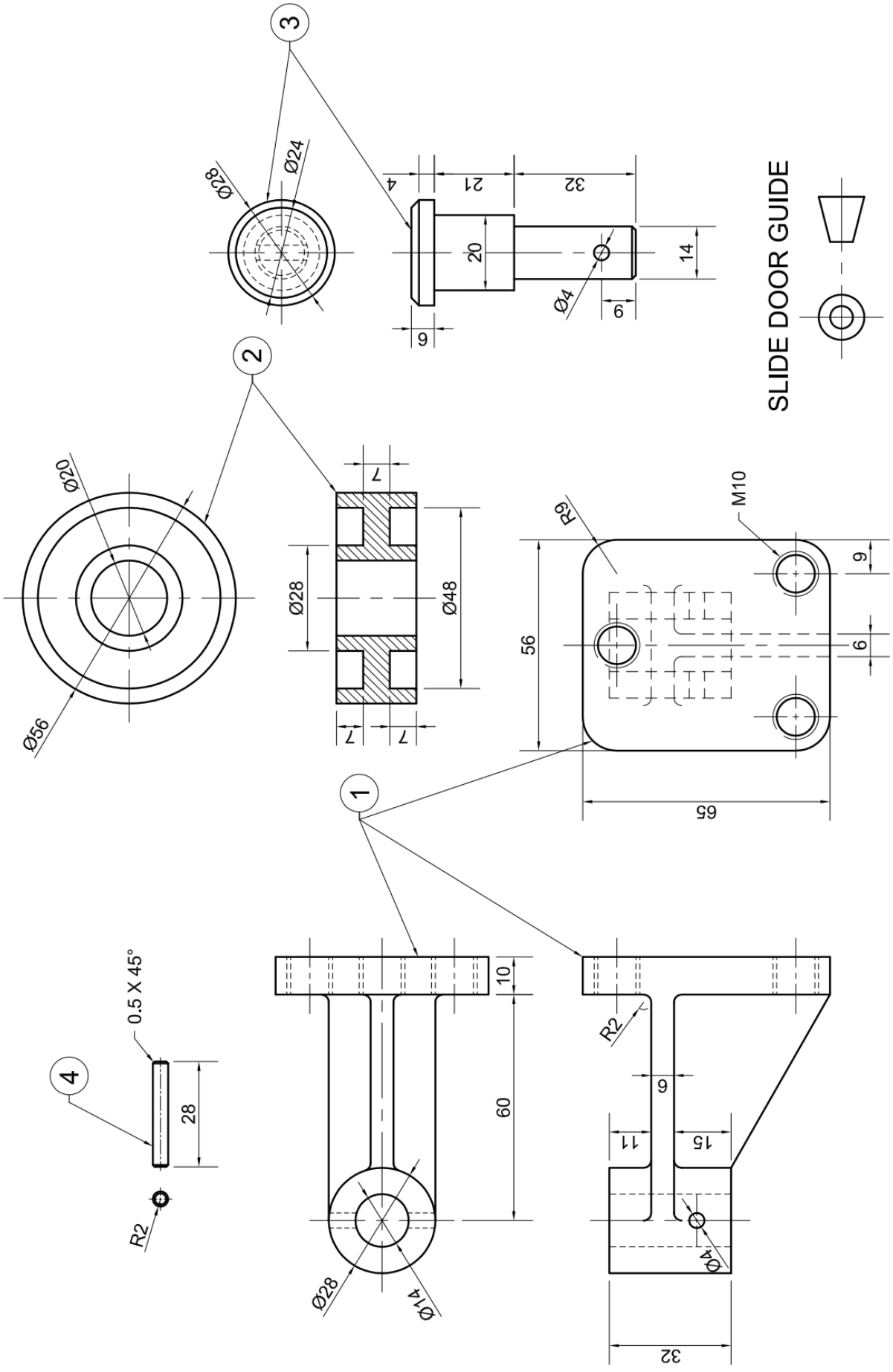

FIGURE 3

Copyright reserved